GENERAL NOTES

Adhere to the practices and processes set out in the PRB Landscape Specifications (NatSpec), issued with the Documentation for Tender.

All contractors, and all works undertaken, must comply with the National Construction Code, relevant Australian Standards, Environmental Protection policies, Workplace Health and Safety requirements, Local Council/Governance regulations, and any applicable Heritage Council requirements.

All relevant permits and approvals must be obtained by the contractor prior to commencing any works.

The contractor must undertake a full site set-out and verify all dimensions prior to commencing works. Contact Before You Dig Australia (BYDA.com.au) to identify underground services before any excavation or penetration works begin. Ensure all required temporary fencing is installed, including site fencing, temporary pool fencing, Tree Protection Zone (TPZ) fencing, and temporary balustrades where applicable.

All contractors must be aware of existing trees to be retained on site. Refer to the Arborist Report for Tree Protection Zones (TPZ), Structural Root Zones (SRZ), and protective fencing requirements during construction. Allow for root barriers and deflectors to the manufacturer’s specification at the time of planting (with periodic maintenance thereafter) to assist roots in developing away from services, pavements, walls, and structures.

Canopies of proposed trees are illustrated at approximately 75% of their expected mature diameter.

SAFETY IN DESIGN

- No part of this design has been identified as posing an abnormal risk to health and safety, within it's intended use. PRB Design advises client/contractor to consult qualified WHS Professional/ Building Certifier/ Engineer and/or Architect regarding any items of concern.
- There are no Australian Standards for use of allergenic/ toxic plants in landscape design. Any plants not classified as 'culinary plants' should not be consumed, and young children & pets should be supervised when interacting with gardens. All plants that produce pollen can trigger hay fever in those who are prone, which is a general risk not confined to the gardens of this project. Allergy sufferers are advised to speak to their GP if they have any concerns.
- Seek specialist consultation for fire/ bushfire risk mitigation measures. PRB Design welcomes professional feedback on all safety matters, and ultimately does not accept liability in these matters as they fall outside of our scope and field of expertise.
- Should any further safety risks be identified within this design, please report to PRB Design immediately.
- Seek professional advice regarding safe construction and continuing maintenance.

SURFACE DRAINAGE

SURFACE CONSTRUCTION	TYPICAL SLOPE
Concrete and asphalt cover	≥1.5% (2% preferred)
Concrete and natural stone tiles	≥2.0 - 2.5%
Concrete and clinker (brick) paving	≥2.5%
Natural stone paving/ sett/ cobble	≥2.5 - 3.0%
Non-bonded path surfaces (granitic sand, toppings)	2.0 - 4.0%
Permeable coverings (gravel, steppers)	1.0 - 5.0%
Turf	≥1.0 - 2.0%

SLOPE MANAGEMENT

RISE : RUN	GRADIENT	DEGREES	TYPICAL USE / NOTES	MAX LENGTH
1:100	1%	0.6°	min hardstand fall to drain	
1:50	2%	1.15°	max crossfall to path	
1:33	3%	1.72°	gentle landscape fall	
1:21	4.76%	2.73°	sloped path (not an AS1428.1 ramp)	= 25m
1:20	5%	2.86°	DDA ramp with handrails (P4/R11+)	= 15m between landings
1:14	7.14%	4.09°	DDA ramp with handrails (P5/R12+)	= 9m between landings
1:10	10%	5.74°	step ramp (max H190mm) / gravel drive (typ. max)	
1:8	12.5%	7.13°	threshold ramp (max rise 35mm)	= 280mm
1:7	14.3%	8.1°	typical rural drive grade (CFA guidance - confirm locally)	
1:5	20%	11.3°	steep rural drive (CFA max)	= 50m
1:4	25%	14.04°	ride on mower maximum	
1:3	33%	18.4°	batter to garden/ push mower workable	
1:2	50%	26.57°	batter requiring stabilisation / whipper snipper mowing	
1:1	100%	45°	high erosion risk - engineered solution required; robot mower only	

SLIP RATINGS

PRB Design may specify tiles or pavers that do not meet the required slip rating in their supplied condition. Where a selected surface is non-compliant, an approved anti-slip treatment such as *Slipstop* or an equivalent product may be applied to achieve the required performance.

For outdoor areas, including pool surrounds, a minimum slip rating of P4 / R11 or higher should be achieved. Always refer to the supplier’s product testing data to confirm compliance.

TOLERANCES

Finish all surfaces to the required level, grade and shape within the following tolerances:

General Earthworks

- Under building slabs and load-bearing elements: +0 / −25 mm
- Pavement subgrades: +0 / −40 mm
- Batters: No steeper than the slope shown on the drawings. Flatter slopes are acceptable provided they do not impact boundaries, drainage paths, or required clearances to buildings, pavements or landscaping.
- Other ground surfaces: ±50 mm, provided the area remains free-draining and matches adjacent construction where required. Surface smoothness to be equivalent to that produced by a scraper blade.

Pavement Base and Subbase

Finish the surface to the required level, grade and shape within the following tolerances:

- Subbase: +10 / −25 mm
- Base: +10 / −5 mm

Finished Pavement or Paving Surface

Conform to the documented finished levels within the following tolerances:

- Asphalt: ±10 mm
- Concrete: +10 / −0 mm
- Segmental paving:
  - Finished level: ±8 mm
  - Height deviation between adjacent units (lippage): ≤2 mm
- Granular surfaces: ±10 mm
- Lippage between restored and adjacent existing surfaces: ≤5 mm

NB: Refer to PRB Design Pty Ltd Landscape Specifications for further information

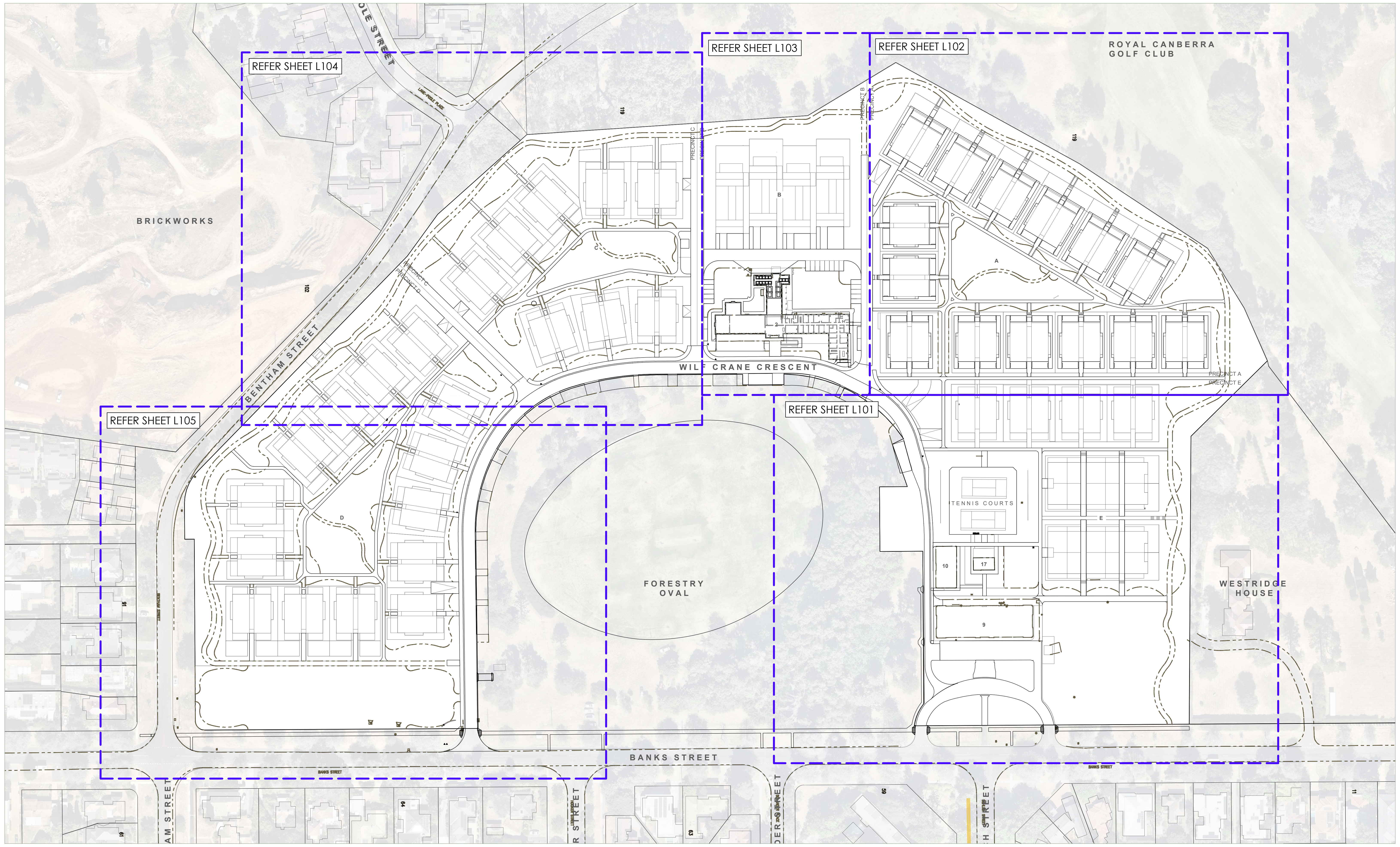

SITE CONTEXT AND KEY PLAN - 1:1000 @ A1

LANDSCAPE DESIGN STATEMENT

The landscape design for the Yarralumla Forestry Precinct establishes a high-quality, park-like environment that respects Country, retains significant trees, and enhances the heritage character of the site. The proposal delivers a cohesive public realm and a series of refined garden spaces that support the redevelopment's residential, community, and civic functions.

CONNECTION TO COUNTRY

The design acknowledges the site as Ngunnawal and Ngambri Country and responds to its cultural and ecological significance. Existing canopy trees and soft ground conditions are retained wherever possible to preserve the experience of moving through shaded, mature landscape. New planting complements these values and reinforces the site's long relationship with trees, stewardship, and seasonal change.

HERITAGE INTEGRATION

The precinct's European heritage buildings, originally associated with the national forestry school and later CSIRO research, are retained as visual and community landmarks. The landscape reinforces their prominence through structured planting, natural stone paving, and clear pedestrian connections that respect historic alignments and sightlines.

TREE AND PLANTING STRATEGY

The existing arboretum character is strengthened through the retention of key specimens and the introduction of compatible species including maples, elms, magnolias, birches, pears, and oaks. Understorey planting uses classic, evergreen structure with seasonal highlights, creating a refined and cohesive garden character. Rolling lawns provide openness and reinforce the parkland setting.

PUBLIC REALM AND MATERIALS

The public realm is unified through high-quality materials including natural stone paving, premium furnishings, and a consistent lighting and streetscape palette. Path networks improve accessibility and encourage movement through the site, while maintaining the informal, shaded qualities that define the precinct.

OPEN SPACE AND COMMUNITY USE

Large lawn areas, shaded paths, and garden rooms provide flexible spaces for recreation, gathering, and quiet enjoyment. These spaces support community life and reinforce the site's identity as a place of learning, research, and connection to landscape.

OVERALL INTENT

The proposal delivers a landscape that is respectful, contemporary, and enduring. It celebrates the site's Indigenous, scientific, and architectural histories while providing a luxurious, high-amenity environment for future residents and visitors. The design strengthens the precinct's identity, enhances biodiversity, and contributes positively to the character of Yarralumla.

DETAIL REPORT

NUMBER	TITLE	DETAIL
1/L800	LANDSCAPE CONSTRUCTION SPECIFICATIONS	TD-PR-01
2/L800	TREE PROTECTION DETAIL – NOMINAL ROOT ZONE (NRZ)	TD-PR-100
3/L800	TREES - OPEN FIELD PLANTINGS	P3-PL-04
4/L800	TYPICAL TREE PLANTING TO GARDEN BED	P3-PL-01
5/L800	DRAINAGE TRENCHING	TD-ST-01
6/L800	PLANTING BED - EXCAVATED, TYPICAL	P3-PL1-01
7/L800	GARDEN BED BERMS	P3-PL1-02
8/L800	RETAINING WALL CONSTRUCTION STRATEGIES, CONCRETE BLOCK	TD-FE-BLO-01
9/L800	TYPICAL SHRUB PLANTING	P3-PL-02
10/L800	SHRUB TO SLOPE - MODIFIED SOIL	P3-PL-03
11/L800	SLEEPER RETAINING WALL, H BEAM - TYPICAL DETAIL	P3-FE-RET-05
12/L800	PRB IRRIGATION NOTES	P3-IR-01
13/L800	TYPICAL STEEL EDGING	P3-GA-02
14/L800	SURFACE LEVELS TO TYPICAL STEEL EDGING	P3-GA-04
15/L800	LOOSE PEBBLE/ GRAVEL PATH/ DRIVE	TD-GR-52
16/L800	LAWN - INSTANT TURF (TYPICAL)	P3-GR-11
17/L800	TURF - NON-IRRIGATED/ HYDROSEEDED	P3-GR-12
18/L800	MINIMUM PLANTER ALLOWANCES - BEST PRACTICE	P3-RA-28
19/L800	MODULAR PLANTER, ALUMINIUM - TYPICAL DETAIL	P3-RA-23
20/L800	IN-SITU PLANTER - TYPICAL DETAIL	P3-RA-01
21/L800	TREE RISER - TYPICAL DETAIL	P3-RA-22
22/L800	HARDSTAND SLIP-RATING COMPLIANCE	P3-HA-01
23/L800	UNIT PAVING/ FLAGGING TO SLAB AND MORTAR	P3-HA-02
24/L800	CONCRETE FOOTPATH	TD-CO-103
25/L800	CONCRETE DRIVE - RESIDENTIAL	TD-CO-104
26/L800	CONCRETE DRIVE - HEAVY DUTY AND CROSSOVERS	TD-CO-109

SHEET INDEX

SHEET	DESCRIPTION
L000	COVER SHEET
L001	MASTER PLAN
L004	TREE REMOVALS AND RETENTION PLAN
L005	LANDSCAPE MANAGEMENT AND PROTECTION
L006	LANDSCAPE MANAGEMENT AND PROTECTION (2)
L007	LANDSCAPE MANAGEMENT AND PROTECTION (3)
L008	LANDSCAPE MANAGEMENT AND PROTECTION (4)
L009	LANDSCAPE MANAGEMENT AND PROTECTION (5)
L010	LANDSCAPE MANAGEMENT AND PROTECTION (6)
L101	LSCP GA - RETIREMENT PRECINCT
L102	LSCP GA - PRECINCT A
L103	LSCP GA - PRECINCT B
L104	LSCP GA - PRECINCT C
L105	LSCP GA - PRECINCT D
L106	WILF CRANE CRES AND COMMUNITY
L200	SCHEDULES & MATERIAL SELECTIONS
L350	PLANTING PALETTE
L800	DETAILS

PROPERTY DETAILS

Lot and Plan No: *Block 7 Section 4, Yarralumla*
Local Government: *National Capital Authority*

PAUL BANGAY
THE STUDIO

54 GWYNNE STREET CREMORNE
VIC 3121 AUSTRALIA | T +61 3 9070 6050
PRB DESIGN PTY LTD | ABN 20 066 291 076
PAULBANGAY.COM

ISSUE DATE 6th May 2026
PROJECT STATUS CONCEPT DESIGN
SCALE 1:1000 @ A0 **PAGE** 1 of 18
ARCHITECT STEWART ARCHITECTURE
LANDSCAPE ARCHITECT EH **CHECKED BY** PB
CLIENT BLOC
PROJECT FORESTRY PLACE, YARRALUMLA ACT
SITE INSPECTED 23/03/2026
CONTEXT **AREA/ LEVEL** 260225 **JOB NO.**
L000 **SHEET NO.** A **ISSUE**

COVER SHEET
DRAWING TITLE:

[NOT FOR CONSTRUCTION]

VERIFY ALL DIMENSIONS ON SITE PRIOR TO COMMENCEMENT OF WORKS/ ORDERING. DO NOT SCALE FROM REPRODUCED/ COPIED DRAWINGS, USE ORIGINAL PLOT ONLY.
CONTRACTOR AND CLIENT TO OBTAIN ALL PERMITS/ APPROVALS. STRUCTURAL ELEMENTS DETAILED BY PRB DESIGN FOR AESTHETIC REFERENCE ONLY.
CHECK ALL DRAWINGS, QUANTITIES AND MATERIALS; REPORT ANY DISCREPANCIES/ ERRORS TO PRB DESIGN.

major works (preliminary)
# forestry place

LANE-POOLE PLACE
119
BRICKWORKS
102
BENTHAM STREET
ROYAL CANBERRA GOLF CLUB
119
PRECINCT B
PRECINCT C
PRECINCT A
HERITAGE BUILDING 2
WILF CRANE CRESCENT
PRECINCT D
FORESTRY OVAL
TENNIS COURTS
RETIREMENT PRECINCT
HERITAGE BUILDING 10
HERITAGE BUILDING 17
WESTRIDGE HOUSE
HERITAGE BUILDING 9
GOLDEN SUNMOTH HABITAT
BANKS STREET
BANKS STREET
BANKS STREET
BENTHAM STREET
HOOKER STREET
SOLANDER STREET
SCHLICH STREET

PROPOSED CONCEPT SCHEDULE MASTER PLAN

SYMBOL	DESCRIPTION	QTY
🟩	Irrigated New Planting	16,697 m²
🟩	Irrigated Lawn	15,070 m²
🟩	Dryland Grass	13,670 m²
▨	Granular Surface (Gravel)	4,399 m²
▨	Pedestrian Pavement	7,896 m²
▨	Vehicular Pavement	6,463 m²
▨	Shared Zone	3,617 m²

PAUL BANGAY
THE STUDIO

54 GWYNNE STREET CREMORNE
VIC 3121 AUSTRALIA | T +61 3 9070 6050
PRB DESIGN PTY LTD | ABN 20 066 291 076
PAULBANGAY.COM

ISSUE DATE: 6th May 2026
PROJECT STATUS: CONCEPT DESIGN
SCALE: 1:500 @ A0 PAGE: 2 of 18
ARCHITECT: STEWART ARCHITECTURE
LANDSCAPE ARCHITECT: EH CHECKED BY: PB
CLIENT: BLOC
PROJECT: FORESTRY PLACE, YARRALUMLA ACT
SITE INSPECTED: 23/03/2026
AREA/ LEVEL: SITE JOB NO.: 260225
SHEET NO.: L001 ISSUE: A

DRAWING TITLE: MASTER PLAN

[NOT FOR CONSTRUCTION]

VERIFY ALL DIMENSIONS ON SITE PRIOR TO COMMENCEMENT OF WORKS/ ORDERING. DO NOT SCALE FROM REPRODUCED/ COPIED DRAWINGS. USE ORIGINAL PLOT ONLY.
CONTRACTOR AND CLIENT TO OBTAIN ALL PERMITS/ APPROVALS. STRUCTURAL ELEMENTS DETAILED BY PRB DESIGN FOR AESTHETIC REFERENCE ONLY.
CHECK ALL DRAWINGS, QUANTITIES AND MATERIALS; REPORT ANY DISCREPANCIES/ ERRORS TO PRB DESIGN.

scale 1:500 @ A0

PAUL BANGAY STUDIO

major works (preliminary)

forestry place

TREE REMOVAL & RETENTION - GENERAL NOTES

1. This plan is to be read in conjunction with the project Arboricultural Assessment (2026), Tree Schedule/Tree Data table, and the Landscape Management & Protection Plan (LMPP).
2. All trees shown have been surveyed and tagged. Retention/removal outcomes are as identified in the Tree Schedule and shown on this plan.
3. Tree removal is limited to trees nominated for removal (including dead/dying/unsafe trees and nominated weed species where identified). Trees nominated for retention are to be retained and protected.
4. Any change to the nominated retention/removal outcome, or any additional removals, requires written approval prior to implementation (including NCA approval where applicable).
5. Tree protection measures (including TPZ/SRZ requirements, fencing, supervision and permitted/prohibited works within TPZs) are specified in the LMPP and must be implemented for all retained trees.

TREES TO BE RETAINED AND PROTECTED (within site boundary)

- NOTING THAT ALL TREES BEYOND SITE BOUNDARY SHALL BE RETAINED AND PROTECTED

84, 85, 87,

208, 209, 210, 211

227, 239, 243, 244, 250, 257, 262,

291, 292,

294, 295, 299, 300, 301, 302, 303, 304, 305, 306, 307, 308, 309, 310, 311, 312, 313, 315, 316, 317, 318, 319, 320, 321, 322, 323, 324, 334, 336, 337, 338, 339, 340, 341, 342, 343, 344, 345, 346, 347, 348, 349, 350, 351, 356, 357, 358, 359, 360, 365, 367,

567, 569, 571, 572, 581, 582, 585, 647, 649, 650, 794, 795

1095, 1098

1183, 1185, 1187

1193, 1194, 1195, 1198,

1220, 1221, 1222,

1247, 1249, 1250, 1251, 1252, 1253, 1254, 1255

1272, 1273, 1274, 1293, 1294, 1295, 1296, 1297,

1300, 1302, 1305,

1318, 1317, 1315, 1316

1339, 1341, 1342,

1357, 1358, 1359, 1360, 1361, 1362, 1363, 1366, 1368, 1369, 1373,

1455, 1456, 1457, 1463, 1486, 1489, 1499, 1500,

1509, 1510, 1511, 1512, 1513, 1514, 1520,

1539, 1540, 1541

LANE-POOLE PLACE
119
119
102
BRICKWORKS
ROYAL CANBERRA GOLF CLUB
WILF CRANE CRESCENT
FORESTRY OVAL
TENNIS COURTS
GOLDEN SUNMOTH HABITAT
WESTRIDGE HOUSE
BENTHAM STREET
BANKS STREET
BANKS STREET
BANKS STREET
BENTHAM STREET
HOOKER STREET
SOLANDER STREET
SCHLICH STREET

LEGEND

🟢	Existing Tree & TPZ (retain and protect)
🔴	Tree to be Removed (subject to approval)

scale 1:500 @ A0

PAUL BANGAY STUDIO

major works (preliminary)

forestry place

PAUL BANGAY
THE STUDIO
54 GWYNNE STREET CREMORNE
VIC 3121 AUSTRALIA | T +61 3 9070 6050
PRB DESIGN PTY LTD | ABN 20 066 291 076
PAULBANGAY.COM

ISSUE DATE	6th May 2026		
PROJECT STATUS	CONCEPT DESIGN		
SCALE	1:500 @ A0	PAGE	3 of 18
ARCHITECT	STEWART ARCHITECTURE		
LANDSCAPE ARCHITECT	EH	CHECKED BY	PB
CLIENT	BLOC		
PROJECT	FORESTRY PLACE, YARRALUMLA ACT		
SITE INSPECTED	23/03/2026		
SITE AREA/ LEVEL		JOB NO.	260225
SHEET NO.	L004	ISSUE	A

DRAWING TITLE: TREE RETENTION AND REMOVALS PLAN

N

[NOT FOR CONSTRUCTION]

VERIFY ALL DIMENSIONS ON SITE PRIOR TO COMMENCEMENT OF WORKS/ ORDERING. DO NOT SCALE FROM REPRODUCED/ COPIED DRAWINGS, USE ORIGINAL PLOT ONLY.
CONTRACTOR AND CLIENT TO OBTAIN ALL PERMITS/ APPROVALS. STRUCTURAL ELEMENTS DETAILED BY PRB DESIGN FOR AESTHETIC REFERENCE ONLY.
CHECK ALL DRAWINGS, QUANTITIES AND MATERIALS; REPORT ANY DISCREPANCIES/ ERRORS TO PRB DESIGN.

LANDSCAPE MANAGEMENT & PROTECTION PLAN (LMPP)

Block 7, Section 4, Banks Street, Yarralumla ACT
Prepared for Works Approval - National Capital Authority (NCA)
April 2026

1. Purpose and Statutory Context

This Landscape Management & Protection Plan (LMPP) has been prepared to guide the protection, management, and renewal of trees and landscape values during the planning, construction, and establishment phases of development on Block 7, Section 4, Yarralumla.

The site is located on NCA-controlled land and forms part of the former Australian Forestry School, a place listed for Commonwealth Heritage values. The LMPP supports compliance with:

- The National Capital Plan
- NCA Works Approval requirements
- The site's Commonwealth Heritage values
- AS4970-2009 Protection of Trees on Development Sites
- The Urban Forest Act 2023 (used as a guiding instrument only)

This LMPP integrates the findings of the 2026 Arboricultural Assessment prepared by Canopy Tree Experts, which assessed 1550 trees over 6 m in height using Visual Tree Assessment (VTA) methodology.

2. Heritage Landscape Framework

The site's heritage significance is derived from its historic role as a forestry training and research precinct. The landscape contains:

- A vast range of exotic and coniferous species, many planted in curated groupings
- Trees of botanic, scientific, and cultural significance
- Species representing a significant genetic resource
- Exceptional trees, including those listed as critically endangered by the IUCN
- A landscape character defined by arboretum-like diversity, experimental plantings, and mature canopy structure

The LMPP ensures that development protects and reinforces these values by:

- Retaining high-value trees and significant groupings
- Managing construction impacts to avoid heritage loss
- Reinstating historic planting patterns where removal is unavoidable
- Ensuring replacement planting maintains the site's scientific and landscape character

3. Existing Tree Inventory

The arboricultural assessment (March 2026) identified:

- 1550 trees over 6 m assessed using VTA
- Trees assessed individually or in species-based groups
- 24 Tree Groups classified as Exceptional, High, Medium, Poor, or Weed
- Identification of Registered Trees, Regulated Trees, Park Trees, and IUCN-listed species
- Tree numbers, heights, canopy radii, and trunk circumferences based on the Veris survey (07302.20)
- Trees under 8 m or weed species identified but not fully assessed

The LMPP must be read in conjunction with:

- The Tree Schedule
- The Tree Location Plan (A0)
- The Arboricultural Assessment (2026)

4. Tree Protection Zones (TPZ) and Structural Root Zones (SRZ)

TPZ and SRZ requirements are calculated in accordance with AS4970-2009.

The LMPP includes:

- TPZ radius for each retained tree based on trunk circumference at 1.4 m AGL
- SRZ calculations where required
- TPZ fencing specifications (1.8 m high rigid fencing, braced, with exclusion signage)
- No-go zones for machinery, excavation, stockpiling, parking, or washout
- Identification of trees requiring extended TPZs due to crown protection needs
- Allowable D10 TPZ incursion only where justified and supervised

5. Pre-Construction Requirements

Before any works commence:

- Install TPZ fencing to all retained trees
- Conduct a pre-start meeting with the project arborist
- Induct all contractors on NCA tree protection requirements
- Install temporary irrigation or moisture protection where required
- Apply mulch to root zones
- Undertake non-destructive root investigation where service conflicts are suspected
- Confirm that no invasive diagnostic methods will be used unless approved

6. Construction Phase Controls

6.1 Works Allowed Within TPZ (Only if Unavoidable)

- Must be supervised by an AQF Level 5 arborist
- Only non-destructive excavation permitted (air spade, hydro-vac)
- Root pruning must follow AS4373 and arborist direction
- No cutting of roots >30 mm without approval

6.2 Works Prohibited Within TPZ

- Trenching or excavation
- Compaction or grade changes
- Storage of materials, spoil, or equipment
- Parking or machinery movement
- Concrete washout or chemical runoff
- Damage to bark, roots, or canopy

6.3 Service Coordination

- Services must be routed outside TPZs wherever possible
- If unavoidable: trenchless installation + root protection mats + arborist supervision

6.4 Indirect Impact Controls

- Dust suppression
- Sediment and erosion control
- Heat and wind protection
- Temporary irrigation during drought or heatwaves

7. Replacement Planting and Renewal Strategy

7.1 Species Selection Logic

Replacement species have been selected to:

- Reinforce the historic forestry school landscape
- Maintain botanical continuity with removed species
- Reflect the form, scale, and seasonal character of significant trees
- Support the site's scientific and genetic heritage values
- Achieve comparable mature canopy to removed trees

7.2 Renewal of Significant Groupings

Where significant groupings or avenues are affected:

- Reinstatement of original spatial patterns, spacing, and alignments
- Maintenance of the arboretum-like diversity
- Preservation of visual coherence as new trees mature

7.3 Propagation of Rare or Significant Species

Where removal of significant, endangered, or rare species is unavoidable:

- Seeds or propagation material will be collected prior to removal
- Material will be grown at a local nursery to maintain provenance
- Propagated trees will be replanted on site to preserve genetic lineage

7.4 Canopy Continuity

- Replacement planting aligns with the Master Plan
- Demonstrates minimal net loss of canopy cover
- Prioritises large-form species
- Includes canopy projections at maturity

8. Soil, Planting Pits, and Establishment

All replacement trees will be planted with:

- Adequate soil volume for mature growth
- Engineered planting pits where required
- Organic mulch to 75 mm depth
- Irrigation during establishment
- Formative pruning to develop stable structure

9. Post-Construction Maintenance (2-5 Years)

Maintenance includes:

- Watering schedule appropriate to species and season
- Mulching and soil conditioning
- Pest and disease monitoring
- Replacement of failed trees
- Reporting to the NCA and heritage consultant

10. Monitoring, Reporting, and Compliance

Responsibilities include:

- Project Arborist: inspections, supervision, reporting, incident response
- Contractor: compliance with TPZ controls and LMPP requirements
- Site Manager: enforcement of exclusion zones and reporting breaches

Inspection frequency:

- Pre-construction
- Monthly during construction
- At key milestones (services installation, excavation, hardscape works)
- Post-construction establishment inspections

Any TPZ breach must be reported immediately and rectified under arborist direction.

11. Drawings and Appendices

The LMPP must be read with:

- Tree Retention & Removal Plan
- TPZ diagrams
- Construction staging plan
- Service alignment plan
- Replacement planting plan
- Species schedule
- Arboricultural Assessment (2026)
- Heritage consultant's advice
- NCA Works Approval conditions

Tree Schedule

Group Number	Tree Number	Species	Height Range (above 6m)	Trunk Circum. (m)	Canopy Spread (m)	Health	Structure	Stage	Tree Protection Status	Tree Quality Classification	Arboricultural Recommendation	TPZ AS 4970	D10*	Comments/summary
Street Trees	1	Cedrus atlantica - Atlantic Cedar	15	3.14	14	Good	Poor	V	Registered	High	Retain	6.9	4.8	Registered veteran street trees are drought affected, The largest is lop sided from powerlines clearance.
	2	Cedrus atlantica - Atlantic Cedar	10	0.63	6			J	Registered	Low	Retain	2.4	1.6	
	3	Cedrus atlantica - Atlantic Cedar	10	2.20	12	Fair	Poor	V	Registered	Medium	Retain	8.4	5.6	
	4	Cedrus atlantica - Atlantic Cedar	10.5	1.88	14	Fair	Good	V	Registered	Medium	Retain	7.2	4.8	
	5	Cedrus atlantica - Atlantic Cedar	10	3.14	18	Fair	Good	V	Registered	Medium	Retain	12.0	8.1	
	6	Cedrus atlantica - Atlantic Cedar	10.5	2.51	16	Fair	Good	V	Registered	Medium	Retain	9.6	6.4	
	7	Cedrus atlantica - Atlantic Cedar	10	1.57	10	Poor	Good	V	Registered	Medium	Retain	6.0	4.0	
	8	Cedrus atlantica - Atlantic Cedar	8	1.26	8	Poor	Good	V	Registered	Medium	Retain	4.8	3.2	
	9	Betula pendula - Silver Birch	7	1.26	8	Poor	Poor	EM	Not Regulated	Poor	Retain/remove	4.8	3.2	
	10	Eucalyptus viminalis - Ribbon Gum	11	0.94	12	Fair	Fair	EM	Regulated Tree	Medium	Retain/remove	3.6	2.4	
	11	Populous deltoide	16	1.26	4	Very Poor	Poor	M	Regulated Tree	Poor	Retain/remove	4.8	3.2	In decline, top dead
	12	Pinus radiata - Monterey Pine	16.5	2.20	8				Pest Plant (Weed)			8.4	5.6	
GROUP 1	13	Cedrus atlantica - Atlantic Cedar	12	1.57	8	Poor	Fair	EM	Regulated Tree	Poor	Retain/remove	6.0	4.0	Poor Quality Group, densely planted , Mostly unde12m and range of health conditions. Structure for this tree is generally fair. Some trees have the top missing or are suppressed by others so have not formed a typical structure. majority trees are dead or are in decline.
	14	Cedrus atlantica - Atlantic Cedar	11	1.26	8	Poor	Fair	EM	Regulated Tree	Poor	Retain/remove	4.8	3.2	
	15	Cedrus atlantica - Atlantic Cedar	13	1.88	14	Poor	Fair	EM	Regulated Tree	Poor	Retain/remove	7.2	4.8	
	16	Cedrus atlantica - Atlantic Cedar	12.5	1.88	8	Poor	Fair	EM	Regulated Tree	Poor	Retain/remove	7.2	4.8	
	17	Cedrus atlantica - Atlantic Cedar	13.5	1.26	8	Poor	Fair	EM	Regulated Tree	Poor	Retain/remove	4.8	3.2	
	18	Cedrus atlantica - Atlantic Cedar	12.5	1.88	8	Poor	Fair	EM	Regulated Tree	Poor	Retain/remove	7.2	4.8	
	19	Cedrus atlantica - Atlantic Cedar	13.5	1.88	8	Poor	Fair	EM	Regulated Tree	Poor	Retain/remove	7.2	4.8	
	20	Cedrus atlantica - Atlantic Cedar	11.5	1.57	10	Poor	Fair	EM	Regulated Tree	Poor	Retain/remove	6.0	4.0	
	21	Cedrus atlantica - Atlantic Cedar	11.5	1.57	10	Poor	Fair	EM	Regulated Tree	Poor	Retain/remove	6.0	4.0	
	22	Cedrus atlantica - Atlantic Cedar	11	1.26	10	Poor	Fair	EM	Regulated Tree	Poor	Retain/remove	4.8	3.2	
	23	Cedrus atlantica - Atlantic Cedar	10	1.26	8	Poor	Fair	EM	Regulated Tree	Poor	Retain/remove	4.8	3.2	
	24	Cedrus atlantica - Atlantic Cedar	12	1.26	8	Poor	Fair	EM	Regulated Tree	Poor	Retain/remove	4.8	3.2	
	25	Cedrus atlantica - Atlantic Cedar	9.5	1.57	10	Poor	Fair	EM	Regulated Tree	Poor	Retain/remove	6.0	4.0	
	26	Cedrus atlantica - Atlantic Cedar	10	1.57	12	Poor	Fair	EM	Regulated Tree	Poor	Retain/remove	6.0	4.0	
	27	Cedrus atlantica - Atlantic Cedar	12.5	1.57	12	Poor	Fair	EM	Regulated Tree	Poor	Retain/remove	6.0	4.0	
	28	Cedrus atlantica - Atlantic Cedar	12	1.57	12	Poor	Fair	EM	Regulated Tree	Poor	Retain/remove	6.0	4.0	
	29	Cedrus atlantica - Atlantic Cedar	11	1.57	12	Poor	Fair	EM	Not Regulated	Poor	Retain/remove	6.0	4.0	
	30	Quercus robur - English Oak	12.5	3.14	18	Fair	Poor	EM	Street Tree	Medium	Retain	12.0	8.1	
GROUP 1	31	Cedrus atlantica - Atlantic Cedar	11	0.94	6	Poor	Fair	EM	Regulated Tree	Poor	Retain/remove	3.6	2.4	Poor Quality Group, densely planted , Mostly unde12m and range of health conditions. Structure for this tree is generally fair. Some trees have the top missing or are suppressed by others so have not formed a typical structure. majority trees are dead or are in decline.
	32	Cedrus atlantica - Atlantic Cedar	10	0.94	4	Poor	Fair	EM	Regulated Tree	Poor	Retain/remove	3.6	2.4	
	33	Cedrus atlantica - Atlantic Cedar	11	1.26	8	Poor	Fair	EM	Regulated Tree	Poor	Retain/remove	4.8	3.2	
	34	Cedrus atlantica - Atlantic Cedar	11.5	1.26	8	Poor	Fair	EM	Regulated Tree	Poor	Retain/remove	4.8	3.2	
	35	Cedrus atlantica - Atlantic Cedar	10.5	0.94	6	Poor	Fair	EM	Regulated Tree	Poor	Retain/remove	3.6	2.4	
	36	Cedrus atlantica - Atlantic Cedar	11	1.57	8	Poor	Fair	EM	Regulated Tree	Poor	Retain/remove	6.0	4.0	
	37	Cedrus atlantica - Atlantic Cedar	11	1.26	8	Poor	Fair	EM	Regulated Tree	Poor	Retain/remove	4.8	3.2	
	38	Cedrus atlantica - Atlantic Cedar	12	0.94	6	Poor	Fair	EM	Regulated Tree	Poor	Retain/remove	3.6	2.4	
	39	Cedrus atlantica - Atlantic Cedar	12.5	1.26	6	Poor	Fair	EM	Regulated Tree	Poor	Retain/remove	4.8	3.2	
	40	Cedrus atlantica - Atlantic Cedar	11	0.94	6	Poor	Fair	EM	Regulated Tree	Poor	Retain/remove	3.6	2.4	
	41	Cedrus atlantica - Atlantic Cedar	10	0.79	4	Poor	Fair	EM	Regulated Tree	Poor	Retain/remove	3.0	2.4	
	42	Cedrus atlantica - Atlantic Cedar	11	1.26	6	Poor	Fair	EM	Regulated Tree	Poor	Retain/remove	4.8	3.2	
	43	Cedrus atlantica - Atlantic Cedar	12	0.94	6	Poor	Fair	EM	Regulated Tree	Poor	Retain/remove	3.6	2.4	
	44	Cedrus atlantica - Atlantic Cedar	10	0.94	6	Poor	Fair	EM	Regulated Tree	Poor	Retain/remove	3.6	2.4	
	45	Cedrus atlantica - Atlantic Cedar	10	0.94	6	Poor	Fair	EM	Regulated Tree	Poor	Retain/remove	3.6	2.4	
	46	Cedrus atlantica - Atlantic Cedar	11	0.94	8	Poor	Fair	EM	Regulated Tree	Poor	Retain/remove	3.6	2.4	
	47	Cedrus atlantica - Atlantic Cedar	11	0.94	8	Poor	Fair	EM	Regulated Tree	Poor	Retain/remove	3.6	2.4	
	48	Cedrus atlantica - Atlantic Cedar	11	0.94	8	Poor	Fair	EM	Regulated Tree	Poor	Retain/remove	3.6	2.4	
	49	Cedrus atlantica - Atlantic Cedar	9	0.79	6	Poor	Fair	EM	Regulated Tree	Poor	Retain/remove	3.0	2.4	
	50	Cedrus atlantica - Atlantic Cedar	11	1.10	8	Poor	Fair	EM	Regulated Tree	Poor	Retain/remove	4.2	3.2	
	51	Cedrus atlantica - Atlantic Cedar	10	1.26	8	Poor	Fair	EM	Regulated Tree	Poor	Retain/remove	4.8	3.2	
	52	Cedrus atlantica - Atlantic Cedar	10	0.94	6	Poor	Fair	EM	Regulated Tree	Poor	Retain/remove	3.6	2.4	
	53	Cedrus atlantica - Atlantic Cedar	11	1.10	6	Poor	Fair	EM	Regulated Tree	Poor	Retain/remove	4.2	3.2	
	54	Cedrus atlantica - Atlantic Cedar	11	1.10	6	Poor	Fair	EM	Regulated Tree	Poor	Retain/remove	4.2	3.2	
	55	Cedrus atlantica - Atlantic Cedar	11	0.94	6	Poor	Fair	EM	Regulated Tree	Poor	Retain/remove	3.6	2.4	
	56	Cedrus atlantica - Atlantic Cedar	10	0.94	6	Poor	Fair	EM	Regulated Tree	Poor	Retain/remove	3.6	2.4	
	57	Cedrus atlantica - Atlantic Cedar	10	0.94	6	Poor	Fair	EM	Regulated Tree	Poor	Retain/remove	3.6	2.4	
	58	Cedrus atlantica - Atlantic Cedar	8	0.94	6	Poor	Fair	EM	Regulated Tree	Poor	Retain/remove	3.6	2.4	
	59	Cedrus atlantica - Atlantic Cedar	10	0.94	6	Poor	Fair	EM	Regulated Tree	Poor	Retain/remove	3.6	2.4	
	60	Cedrus atlantica - Atlantic Cedar	11	1.26	8	Poor	Fair	EM	Regulated Tree	Poor	Retain/remove	4.8	3.2	
	61	Cedrus atlantica - Atlantic Cedar	10	0.94	6	Poor	Fair	EM	Regulated Tree	Poor	Retain/remove	3.6	2.4	
	62	Cedrus atlantica - Atlantic Cedar	10	0.94	6	Poor	Fair	EM	Regulated Tree	Poor	Retain/remove	3.6	2.4	
	63	Cedrus atlantica - Atlantic Cedar	10	0.79	6	Poor	Fair	EM	Regulated Tree	Poor	Retain/remove	3.0	2.4	
	64	Cedrus atlantica - Atlantic Cedar	9	1.10	8	Poor	Fair	EM	Regulated Tree	Poor	Retain/remove	4.2	3.2	
	65	Cedrus atlantica - Atlantic Cedar	10	1.26	8	Poor	Fair	EM	Regulated Tree	Poor	Retain/remove	4.8	3.2	
	66	Cedrus atlantica - Atlantic Cedar	10	1.26	8	Poor	Fair	EM	Regulated Tree	Poor	Retain/remove	4.8	3.2	
	67	Cedrus atlantica - Atlantic Cedar	10	1.26	8	Poor	Fair	EM	Regulated Tree	Poor	Retain/remove	4.8	3.2	
	68	Cedrus atlantica - Atlantic Cedar	10	1.26	8	Poor	Fair	EM	Regulated Tree	Poor	Retain/remove	4.8	3.2	
	69	Cedrus atlantica - Atlantic Cedar	10	0.94	6	Poor	Fair	EM	Regulated Tree	Poor	Retain/remove	3.6	2.4	
	70	Cedrus atlantica - Atlantic Cedar	12	1.88	10	Poor	Fair	EM	Regulated Tree	Poor	Retain/remove	7.2	4.8	
	71	Cedrus atlantica - Atlantic Cedar	10	1.57	8	Poor	Fair	EM	Regulated Tree	Poor	Retain/remove	6.0	4.0	
	72	Cedrus atlantica - Atlantic Cedar	10	1.57	8	Poor	Fair	EM	Regulated Tree	Poor	Retain/remove	6.0	4.0	
	73	Cedrus atlantica - Atlantic Cedar	11	1.57	8	Poor	Fair	EM	Regulated Tree	Poor	Retain/remove	6.0	4.0	
	74	Cedrus atlantica - Atlantic Cedar	10	1.26	8	Poor	Fair	EM	Regulated Tree	Poor	Retain/remove	4.8	3.2	
	75	Cedrus atlantica - Atlantic Cedar	10	0.94	6	Poor	Fair	EM	Regulated Tree	Poor	Retain/remove	3.6	2.4	
	76	Cedrus atlantica - Atlantic Cedar	10	0.94	6	Poor	Fair	EM	Regulated Tree	Poor	Retain/remove	3.6	2.4	
	77	Cedrus atlantica - Atlantic Cedar	10	0.94	6	Poor	Fair	EM	Regulated Tree	Poor	Retain/remove	3.6	2.4	
	78	Cedrus atlantica - Atlantic Cedar	11	1.57	8	Poor	Fair	EM	Regulated Tree	Poor	Retain/remove	6.0	4.0	
	79	Cedrus atlantica - Atlantic Cedar	11	1.57	8	Poor	Fair	EM	Regulated Tree	Poor	Retain/remove	6.0	4.0	
	80	Cedrus atlantica - Atlantic Cedar	10	0.94	6	Poor	Fair	EM	Regulated Tree	Poor	Retain/remove	3.6	2.4	
	81	Cedrus atlantica - Atlantic Cedar	11	1.57	8	Poor	Fair	EM	Regulated Tree	Poor	Retain/remove	6.0	4.0	
	82	Cedrus atlantica - Atlantic Cedar	10	0.94	6	Poor	Fair	EM	Regulated Tree	Poor	Retain as a group	3.6	2.4	
	83	Cedrus atlantica - Atlantic Cedar	10	0.94	6	Poor	Fair	EM	Regulated Tree	Poor	Retain as a group	3.6	2.4	
	84	Quercus palustris - Pin Oak	14	1.57	14	Fair	Good	EM	Regulated Tree	Medium	Retain/remove	6.0	4.0	Moderate die back
	85	Quercus palustris - Pin Oak	14	1.57	16	Good	Good	EM	Regulated Tree	Medium	Retain	6.0	4.0	
	86	Pinus halepenses - Aleppo Pine	19	2.51	12	Fair	Good	M	Regulated Tree	Medium	Retain	9.6	6.4	Drought affected, foliage yellow
	87	Quercus palustris - Pin Oak	10	1.26	10	Fair	Fair	EM	Regulated Tree	Medium	Retain/remove	4.8	3.2	Moderate die back
	88	Quercus palustris - Pin Oak	6	1.26	6	Poor	Very Poor	EM	Not Regulated	Poor	Retain	4.8	3.2	Top 3m dead
	89	Ulmus glabra - Wych Elm	7	1.26	8	Poor	Fair	EM	Not Regulated	Poor	Retain/remove	4.8	3.2	Elm leaf beetle
	90	Sequoiadendron gigantium	15	3.14	10	Poor	Good	EM	Regulated Tree	Low	Retain/remove	12.0	8.1	In advanced decline
	91	Sequoiadendron gigantium	19	4.08	12	Fair	Good	EM	Regulated Tree	Medium	Retain	15.6	10.5	Drought affected
	92	Pinus poderosa - Western Yellow Pine	16	2.20	14	Fair	Good	M	Regulated Tree	Low	Retain/remove	8.4	5.6	
	93	Quercus palustris - Pin Oak	8	0.79	6	Poor	Good	EM	Not Regulated	Low	Retain	3.0	2.4	
	94	Quercus palustris - Pin Oak	8	1.26	10	Fair	Good	EM	Regulated Tree	Medium	Retain/remove	4.8	3.2	Dead tips
	95	Quercus palustris - Pin Oak	13.5	1.57	12	Good	Fair	EM	Regulated Tree	Medium	Retain/remove	6.0	4.0	Narrow fork main union
Group 2	96	Eucalyptus sideroxylon - Red Ironbark	20	3.14	14	Fair	Fair	EM	Regulated Tree		Retain as a group	12.0	8.1	MEDIUM QUALITY - Mixed group of Eucalyptus species, mostly E.Sideroxylon. included junctions present which is typical of the species
	97	Eucalyptus sideroxylon - Red Ironbark	19	1.26	6	Fair	Fair	EM	Regulated Tree		Retain as a group	4.8	3.2	
	98	Eucalyptus sp. - Gum Tree	13	1.88	8	Fair	Fair	EM	Regulated Tree		Retain as a group	7.2	4.8	
	99	Eucalyptus sideroxylon - Red Ironbark	20	2.20	8	Fair	Fair	EM	Regulated Tree		Retain as a group	8.4	5.6	
	100	Eucalyptus sideroxylon - Red Ironbark	19	1.88	10	Fair	Fair	EM	Regulated Tree		Retain as a group	7.2	4.8	
	101	Eucalyptus sideroxylon - Red Ironbark	14	1.57	8	Fair	Fair	EM	Regulated Tree		Retain as a group	6.0	4.0	
	102	Eucalyptus blakelyi - Red Gum	18	1.26	6	Fair	Fair	EM	Regulated Tree		Retain as a group	4.8	3.2	
	103	Eucalyptus sideroxylon - Red Ironbark	10	0.94	6	Fair	Fair	EM	Regulated Tree		Retain as a group	3.6	2.4	
	104	Eucalyptus sideroxylon - Red Ironbark	19	1.26	10	Fair	Fair	EM	Regulated Tree		Retain as a group	4.8	3.2	
	105	Eucalyptus sideroxylon - Red Ironbark	12	0.94	6	Fair	Fair	EM	Regulated Tree		Retain as a group	3.6	2.4	
GROUP 1	106	Cedrus atlantica - Atlantic Cedar	8	1.26	8	Poor	Fair	EM	Regulated Tree	Poor	Retain/remove	4.8	3.2	Poor Quality Group, densely planted , Mostly unde12m and range of health conditions. Structure for this tree is generally fair. Some trees have the top missing or are suppressed by others so have not formed a typical structure. majority trees are dead or are in decline..
	107	Cedrus atlantica - Atlantic Cedar	10	1.26	6	Poor	Fair	EM	Regulated Tree	Poor	Retain/remove	4.8	3.2	
	108	Cedrus atlantica - Atlantic Cedar	10	1.26	6	Poor	Fair	EM	Regulated Tree	Poor	Retain/remove	4.8	3.2	
	109	Cedrus atlantica - Atlantic Cedar	10	1.26	8	Poor	Fair	EM	Regulated Tree	Poor	Retain/remove	4.8	3.2	
	110	Cedrus atlantica - Atlantic Cedar	10	1.26	8	Poor	Fair	EM	Regulated Tree	Poor	Retain/remove	4.8	3.2	
	111	Cedrus atlantica - Atlantic Cedar	10	1.57	10	Poor	Fair	EM	Regulated Tree	Poor	Retain/remove	6.0	4.0	
	112	Cedrus atlantica - Atlantic Cedar	10	1.57	10	Poor	Fair	EM	Regulated Tree	Poor	Retain/remove	6.0	4.0	
	113	Cedrus atlantica - Atlantic Cedar	9	0.94	6	Poor	Fair	EM	Regulated Tree	Poor	Retain/remove	3.6	2.4	
	114	Cedrus atlantica - Atlantic Cedar	10	1.26	6	Poor	Fair	EM	Regulated Tree	Poor	Retain/remove	4.8	3.2	
	115	Cedrus atlantica - Atlantic Cedar	10	1.26	8	Poor	Fair	EM	Regulated Tree	Poor	Retain/remove	4.8	3.2	
	116	Cedrus atlantica - Atlantic Cedar	10	1.26	8	Poor	Fair	EM	Regulated Tree	Poor	Retain/remove	4.8	3.2	
	117	Cedrus atlantica - Atlantic Cedar	10	1.26	8	Poor	Fair	EM	Regulated Tree	Poor	Retain/remove	4.8	3.2	
	118	Cedrus atlantica - Atlantic Cedar		1.26	8	Poor	Fair	EM	Regulated Tree	Poor	Retain/remove	4.8	3.2	
	119	Cedrus atlantica - Atlantic Cedar	10	1.26	8	Poor	Fair	EM	Regulated Tree	Poor	Retain/remove	4.8	3.2	
	120	Cedrus atlantica - Atlantic Cedar	10	1.26	8	Poor	Fair	EM	Regulated Tree	Poor	Retain/remove	4.8	3.2	
	121	Cedrus atlantica - Atlantic Cedar	10	1.26	8	Poor	Fair	EM	Regulated Tree	Poor	Retain/remove	4.8	3.2	
	122	Cedrus atlantica - Atlantic Cedar	10	1.26	8	Poor	Fair	EM	Regulated Tree	Poor	Retain/remove	4.8	3.2	
	123	Cedrus atlantica - Atlantic Cedar	10	1.26	8	Poor	Fair	EM	Regulated Tree	Poor	Retain/remove	4.8	3.2	
	124	Cedrus atlantica - Atlantic Cedar	10	0.94	6	Poor	Fair	EM	Regulated Tree	Poor	Retain/remove	3.6	2.4	
	125	Cedrus atlantica - Atlantic Cedar	9	1.26	8	Poor	Fair	EM	Regulated Tree	Poor	Retain/remove	4.8	3.2	
	126	Cedrus atlantica - Atlantic Cedar		1.26	8	Poor	Fair	EM	Not Regulated	Poor	Retain/remove	4.8	3.2	
	127	Cedrus atlantica - Atlantic Cedar	9	1.26	8	Poor	Fair	EM	Regulated Tree	Poor	Retain/remove	4.8	3.2	
	128	Cedrus atlantica - Atlantic Cedar	11	1.26	10	Poor	Fair	EM	Regulated Tree	Poor	Retain/remove	4.8	3.2	
	129	Cedrus atlantica - Atlantic Cedar	11	1.26	8	Poor	Fair	EM	Regulated Tree	Poor	Retain/remove	4.8	3.2	
	130	Cedrus atlantica - Atlantic Cedar	10	0.94	6	Poor	Fair	EM	Regulated Tree	Poor	Retain/remove	3.6	2.4	
	131	Cedrus atlantica - Atlantic Cedar	10	1.26	8	Poor	Fair	EM	Regulated Tree	Poor	Retain/remove	4.8	3.2	
	132	Cedrus atlantica - Atlantic Cedar	10	1.26	6	Poor	Fair	EM	Regulated Tree	Poor	Retain/remove	4.8	3.2	
	133	Cedrus atlantica - Atlantic Cedar	10	1.26	8	Poor	Fair	EM	Regulated Tree	Poor	Retain/remove	4.8	3.2	
	134	Cedrus atlantica - Atlantic Cedar	10	0.94	6	Poor	Fair	EM	Regulated Tree	Poor	Retain/remove	3.6	2.4	
	135	Cedrus atlantica - Atlantic Cedar	9	1.26	8	Poor	Fair	EM	Regulated Tree	Poor	Retain/remove	4.8	3.2	
	136	Cedrus atlantica - Atlantic Cedar	11	1.57	10	Poor	Fair	EM	Regulated Tree	Poor	Retain/remove	6.0	4.0	
	137	Cedrus atlantica - Atlantic Cedar	11	0.94	6	Poor	Fair	EM	Regulated Tree	Poor	Retain/remove	3.6	2.4	
	138	Cedrus atlantica - Atlantic Cedar	9	0.94	6	Poor	Fair	EM	Regulated Tree	Poor	Retain/remove	3.6	2.4	
	139	Cedrus atlantica - Atlantic Cedar	10	0.94	8	Poor	Fair	EM	Regulated Tree	Poor	Retain/remove	3.6	2.4	
	140	Cedrus atlantica - Atlantic Cedar	11	1.26	8	Poor	Fair	EM	Regulated Tree	Poor	Retain/remove	4.8	3.2	
	141	Cedrus atlantica - Atlantic Cedar	10	0.94	6	Poor	Fair	EM	Regulated Tree	Poor	Retain/remove	3.6	2.4	
	142	Cedrus atlantica - Atlantic Cedar	11	1.26	6	Poor	Fair	EM	Regulated Tree	Poor	Retain/remove	4.8	3.2	
	143	Cedrus atlantica - Atlantic Cedar	11	1.26	6	Poor	Fair	EM	Regulated Tree	Poor	Retain/remove	4.8	3.2	
	144	Cedrus atlantica - Atlantic Cedar	11	1.26	6	Poor	Fair	EM	Regulated Tree	Poor	Retain/remove	4.8	3.2	
	145	Cedrus atlantica - Atlantic Cedar	9	1.26	8	Poor	Fair	EM	Regulated Tree	Poor	Retain/remove	4.8	3.2	
	146	Cedrus atlantica - Atlantic Cedar	10	0.94	6	Poor	Fair	EM	Regulated Tree	Poor	Retain/remove	3.6	2.4	
	147	Cedrus atlantica - Atlantic Cedar	10	1.26	8	Poor	Fair	EM	Regulated Tree	Poor	Retain/remove	4.8	3.2	
	148	Cedrus atlantica - Atlantic Cedar	10	0.94	8	Poor	Fair	EM	Regulated Tree	Poor	Retain/remove	3.6	2.4	
	149	Cedrus atlantica - Atlantic Cedar	10	0.94	8	Poor	Fair	EM	Regulated Tree	Poor	Retain/remove	3.6	2.4	
	150	Cedrus atlantica - Atlantic Cedar	10	0.94	6	Poor	Fair	EM	Regulated Tree	Poor	Retain/remove	3.6	2.4	
	151	Cedrus atlantica - Atlantic Cedar	10	0.94	6	Poor	Fair	EM	Regulated Tree	Poor	Retain/remove	3.6	2.4	
	152	Cedrus atlantica - Atlantic Cedar	10	0.94	6	Poor	Fair	EM	Regulated Tree	Poor	Retain/remove	3.6	2.4	
	153	Cedrus atlantica - Atlantic Cedar	9	0.94	6	Poor	Fair	EM	Regulated Tree	Poor	Retain/remove	3.6	2.4	
	154	Cedrus atlantica - Atlantic Cedar	10	1.26	6	Poor	Fair	EM	Regulated Tree	Poor	Retain/remove	4.8	3.2	
	155	Cedrus atlantica - Atlantic Cedar	10	1.26	6	Poor	Fair	EM	Regulated Tree	Poor	Retain/remove	4.8	3.2	
	156	Cedrus atlantica - Atlantic Cedar	9	0.94	6	Poor	Fair	EM	Regulated Tree	Poor	Retain/remove	3.6	2.4	
	157	Cedrus atlantica - Atlantic Cedar	9	0.94	6	Poor	Fair	EM	Regulated Tree	Poor	Retain/remove	3.6	2.4	
	158	Cedrus atlantica - Atlantic Cedar	10	1.26	8	Poor	Fair	EM	Regulated Tree	Poor	Retain/remove	4.8	3.2	
	159	Cedrus atlantica - Atlantic Cedar	10	0.94	6	Poor	Fair	EM	Regulated Tree	Poor	Retain/remove	3.6	2.4	
	160	Cedrus atlantica - Atlantic Cedar	10	0.94	6	Poor	Fair	EM	Regulated Tree	Poor	Retain/remove	3.6	2.4	
	161	Cedrus atlantica - Atlantic Cedar	11	1.26	6	Poor	Fair	EM	Regulated Tree	Poor	Retain/remove	4.8	3.2	
	162	Cedrus atlantica - Atlantic Cedar	13	1.57	10	Poor	Fair	EM	Regulated Tree	Poor	Retain/remove	6.0	4.0	
	163	Cedrus atlantica - Atlantic Cedar	13	1.26	8	Poor	Fair	EM	Regulated Tree	Poor	Retain/remove	4.8	3.2	
	164	Cedrus atlantica - Atlantic Cedar	9	0.94	6	Poor	Fair	EM	Regulated Tree	Poor	Retain/remove	3.6	2.4	
	165	Cedrus atlantica - Atlantic Cedar	10	0.94	6	Poor	Fair	EM	Regulated Tree	Poor	Retain/remove	3.6	2.4	
	166	Cedrus atlantica - Atlantic Cedar	8	0.94	6	Poor	Fair	EM	Regulated Tree	Poor	Retain/remove	3.6	2.4	
	167	Cedrus atlantica - Atlantic Cedar	9	0.94	6	Poor	Fair	EM	Regulated Tree	Poor	Retain/remove	3.6	2.4	
	168	Cedrus atlantica - Atlantic Cedar	9	1.26	6	Poor	Fair	EM	Regulated Tree	Poor	Retain/remove	4.8	3.2	
	169	Cedrus atlantica - Atlantic Cedar	11	1.26	8	Poor	Fair	EM	Regulated Tree	Poor	Retain/remove	4.8	3.2	
	170	Cedrus atlantica - Atlantic Cedar	11	0.94	6	Poor	Fair	EM	Regulated Tree	Poor	Retain/remove	3.6	2.4	
	171	Cedrus atlantica - Atlantic Cedar	9	0.94	6	Poor	Fair	EM	Regulated Tree	Poor	Retain/remove	3.6	2.4	
	172	Cedrus atlantica - Atlantic Cedar	10	0.94	6	Poor	Fair	EM	Regulated Tree	Poor	Retain/remove	3.6	2.4	
	173	Cedrus atlantica - Atlantic Cedar	11	1.26	8	Poor	Fair	EM	Regulated Tree	Poor	Retain/remove	4.8	3.2	
	174	Cedrus atlantica - Atlantic Cedar	11	1.26	8	Poor	Fair	EM	Regulated Tree	Poor	Retain/remove	4.8	3.2	
	175	Cedrus atlantica - Atlantic Cedar	10	0.94	6	Poor	Fair	EM	Regulated Tree	Poor	Retain/remove	3.6	2.4	
	176	Cedrus atlantica - Atlantic Cedar	9	0.94	6	Poor	Fair	EM	Regulated Tree	Poor	Retain/remove	3.6	2.4	
	177	Cedrus atlantica - Atlantic Cedar	9	1.26	8	Poor	Fair	EM	Regulated Tree	Poor	Retain/remove	4.8	3.2	
	178	Cedrus atlantica - Atlantic Cedar	9	1.26	8	Poor	Fair	EM	Regulated Tree	Poor	Retain/remove	4.8	3.2	
	179	Cedrus atlantica - Atlantic Cedar	10	1.26	6	Poor	Fair	EM	Regulated Tree	Poor	Retain/remove	4.8	3.2	
	180	Cedrus atlantica - Atlantic Cedar	10	1.26	8	Poor	Fair	EM	Regulated Tree	Poor	Retain/remove	4.8	3.2	
	181	Cedrus atlantica - Atlantic Cedar	10	1.26	8	Poor	Fair	EM	Regulated Tree	Poor	Retain/remove	4.8	3.2	
	182	Cedrus atlantica - Atlantic Cedar	10	1.26	8	Poor	Fair	EM	Regulated Tree	Poor	Retain/remove	4.8	3.2	
	183	Cedrus atlantica - Atlantic Cedar	13	1.26	8	Poor	Fair	EM	Regulated Tree	Poor	Retain/remove	4.8	3.2	
	184	Cedrus atlantica - Atlantic Cedar	16	2.20	10	Poor	Fair	EM	Regulated Tree	Poor	Retain/remove	8.4	5.6	
	185	Cedrus atlantica - Atlantic Cedar	15	2.83	14	Poor	Fair	EM	Regulated Tree	Poor	Retain/remove	10.8	7.2	
	186	Cedrus atlantica - Atlantic Cedar	15	1.88	10	Poor	Fair	EM	Regulated Tree	Poor	Retain/remove	7.2	4.8	
	187	Cedrus atlantica - Atlantic Cedar	15	1.57	10	Poor	Fair	EM	Regulated Tree	Poor	Retain/remove	6.0	4.0	
	188	Cedrus atlantica - Atlantic Cedar	14	1.57	10	Poor	Fair	EM	Regulated Tree	Poor	Retain/remove	6.0	4.0	
	189	Cedrus atlantica - Atlantic Cedar	10	1.57	8	Poor	Fair	EM	Regulated Tree	Poor	Retain/remove	6.0	4.0	
	190	Cedrus atlantica - Atlantic Cedar	10	1.57	8	Poor	Fair	EM	Regulated Tree	Poor	Retain/remove	6.0	4.0	
	191	Cedrus atlantica - Atlantic	9	1.26	8	Poor	Fair	EM	Regulated Tree	Poor	Retain/remove	4.8	3.2	
	192	Cedrus atlantica - Atlantic	8	1.26	8	Poor	Fair	EM	Regulated Tree	Poor	Retain/remove	4.8	3.2	
	193	Cedrus atlantica - Atlantic	8.5	0.94	6	Poor	Fair	EM	Regulated Tree	Poor	Retain/remove	3.6	2.4	
	194	Cedrus atlantica - Atlantic	9	1.26	8	Poor	Fair	EM	Regulated Tree	Poor	Retain/remove	4.8	3.2	
	195	Cedrus atlantica - Atlantic	10	1.26	8	Poor	Fair	EM	Regulated Tree	Poor	Retain/remove	4.8	3.2	
	196	Cedrus atlantica - Atlantic	12	1.57	8	Poor	Fair	EM	Regulated Tree	Poor	Retain/remove	6.0	4.0	
	197	Cedrus atlantica - Atlantic	9	1.26	6	Poor	Fair	EM	Regulated Tree	Poor	Retain/remove	4.8	3.2	
	198	Cedrus atlantica - Atlantic	9.5	1.26	6	Poor	Fair	EM	Regulated Tree	Poor	Retain/remove	4.8	3.2	
	199	Cedrus atlantica - Atlantic	9.5	1.57	8	Poor	Fair	EM	Regulated Tree	Poor	Retain/remove	6.0	4.0	
	200	Aesculus Hippocastanum- Horse Chestnut Tree	8	0.94	8	Good	Fair	Em	Regulated Tree	Medium	Retain	3.6	2.4	tree possibly a memorial tree
	201	Deciduous tree sp.	10	1.26	10	Good	Good	EM	Regulated Tree	Medium	Retain	4.8	3.2	
	202	Eucalyptus bicostata - Blue Gum	20	3.14	20	Good	Poor	M	Regulated Schedule 2	Medium	Major Arboricultural work required refer to comments.	12.0	8.1	Remove deadwood and branch with cockatoo damage. Hollow main Union
	203	Eucalyptus bicostata - Blue Gum	18	1.57	3	Fair	Poor	M	Regulated Schedule 2	Poor	Major Arboricultural work required refer to comments.	6.0	4.0	Remove deadwood
	204	Eucalyptus bicostata - Blue Gum	16	2.20	16	Good	Good	M	Regulated Schedule 2	Medium	Major Arboricultural work required refer to comments.	8.4	5.6	Remove deadwood
	205	Tree is dead	14	2.20	14							8.4	5.6	DEAD
	206	Quercus palustris - Pin Oak	7	0.63	6	Fair	Good	EM	Not Regulated	Medium	Retain/remove	2.4	1.6	
	207	Quercus palustris - Pin Oak	6.5	0.63	6	Fair	Good	EM	Not Regulated	Medium	Retain/remove	2.4	1.6	
	208	Quercus palustris - Pin Oak	10	1.26	10	Fair	Good	EM	Regulated Tree	Medium	Retain/remove	4.8	3.2	
	209	Quercus palustris - Pin Oak	12	1.57	12	Good	Good	EM	Regulated Tree	Medium	Retain	6.0	4.0	
	210	Quercus palustris - Pin Oak	16	1.88	14	Good	Good	EM	Regulated Tree	Medium	Retain	7.2	4.8	
	211	Fraxinus sp. - Ash	9	1.26	12	Fair	Fair	EM	Regulated Tree	Low	Retain/remove	4.8	3.2	Dead tips
	212	koelreuteria species	4	0.94	6	Fair	Fair	EM	Not Regulated	Low	Retain/remove	3.6	2.4	
	213	Fraxinus sp. - Ash	10	1.88	16	Fair	Good	EM	Regulated Tree	Low	Retain/remove	7.2	4.8	
Group 1	214	Cedrus atlantica - Atlantic	16	1.57	10	Poor	Fair	EM	Regulated Tree	Poor	Retain/remove	6.0	4.0	Poor Quality Group, densely planted , Mostly unde12m and range of health conditions. Structure for this tree is generally fair. Some trees have the top missing or are suppressed by others so have not formed a typical structure. majority trees are dead or are in decline.
	215	Cedrus atlantica - Atlantic	15	1.57	8	Poor	Fair	EM	Regulated Tree	Poor	Retain/remove	6.0	4.0	
	216	Cedrus atlantica - Atlantic	20	2.51	12	Poor	Fair	EM	Regulated Tree	Poor	Retain/remove	9.6	6.4	
	217	Cedrus atlantica - Atlantic	20	1.57	8	Poor	Fair	EM	Regulated Tree	Poor	Retain/remove	6.0	4.0	
	218	Cedrus atlantica - Atlantic	20	2.20	10	Poor	Fair	EM	Regulated Tree	Poor	Retain/remove	8.4	5.6	
	219	Cedrus atlantica - Atlantic	20	1.88	10	Poor	Fair	EM	Regulated Tree	Poor	Retain/remove	7.2	4.8	
	220	Cedrus atlantica - Atlantic	22	2.83	20	Poor	Fair	EM	Regulated Tree	Poor	Retain/remove	10.8	7.2	
	221	Cedrus atlantica - Atlantic	20	1.57	10	Poor	Fair	EM	Regulated Tree	Poor	Retain/remove	6.0	4.0	
Group 3	222	Pinus radiata - Monterey Pine	22	2.83	14			Pest Plant (Weed)				10.8	7.2	
	223	Pinus radiata - Monterey Pine	21	2.83	12			Pest Plant (Weed)				10.8	7.2	
	224	Tree is dead	16	1.88	10			Pest Plant (Weed)				7.2	4.8	
	225	Pinus radiata - Monterey Pine	17	2.20	10			Pest Plant (Weed)				8.4	5.6	
	226	Pinus radiata - Monterey Pine	15	2.20	12			Pest Plant (Weed)				8.4	5.6	
Group 4	227	Pinus canariensis - Canary	24	2.51	14	Good	Good	M	Regulated Tree	High	Retain as a group	9.6	6.4	HIGH QUALITY GROUP- deadwood present, good form and health
	228	Pinus canariensis - Canary	24	2.51	18	Good	Good	M	Regulated Tree	High	Retain as a group	9.6	6.4	
	229	Pinus canariensis - Canary	22	1.88	12	Good	Good	M	Regulated Tree	High	Retain as a group	7.2	4.8	
	230	Pinus canariensis - Canary	22	2.51	14	Good	Good	M	Regulated Tree	High	Retain as a group	9.6	6.4	
	231	Pinus canariensis - Canary	23	2.20	12	Good	Good	M	Regulated Tree	High	Retain as a group	8.4	5.6	
	232	Pinus canariensis - Canary	23	2.83	14	Good	Good	M	Regulated Tree	High	Retain as a group	10.8	7.2	
	233	Pinus canariensis - Canary	20	2.51	14	Good	Good	M	Regulated Tree	High	Retain as a group	9.6	6.4	
Group 1	234	Cedrus atlantica - Atlantic	10	1.26	8	Poor	Fair	EM	Regulated Tree	Poor	Retain/remove	4.8	3.2	e for this tree is generally fair. Some
	235	Cedrus atlantica - Atlantic	10	1.26	8	Poor	Fair	EM	Regulated Tree	Poor	Retain/remove	4.8	3.2	
	236	Cedrus atlantica - Atlantic	10	1.26	8	Poor	Fair	EM	Regulated Tree	Poor	Retain/remove	4.8	3.2	
	237	Cedrus atlantica - Atlantic	10	1.26	8	Poor	Fair	EM	Regulated Tree	Poor	Retain/remove	4.8	3.2	

major works (preliminary)
forestry place

PAUL BANGAY
THE STUDIO

54 GWYNNE STREET CREMORNE
VIC 3121 AUSTRALIA | T +61 3 9070 6050
PRB DESIGN PTY LTD | ABN 20 066 291 076
PAULBANGAY.COM

ISSUE DATE 6th May 2026
PROJECT STATUS CONCEPT DESIGN
SCALE 1:500 @ A0 PAGE 4 of 18
ARCHITECT STEWART ARCHITECTURE
LANDSCAPE ARCHITECT EH CHECKED BY PB
CLIENT BLOC
PROJECT FORESTRY PLACE, YARRALUMLA ACT
SITE INSPECTED 23/03/2026
SITE AREA/ LEVEL
260225 JOB NO.
L005 SHEET NO.
A ISSUE
LANDSCAPE MANAGEMENT AND PROTECTION PLAN
DRAWING TITLE:
[NOT FOR CONSTRUCTION]

VERIFY ALL DIMENSIONS ON SITE PRIOR TO COMMENCEMENT OF WORKS/ ORDERING. DO NOT SCALE FROM REPRODUCED/ COPIED DRAWINGS. USE ORIGINAL PLOT ONLY.
CONTRACTOR AND CLIENT TO OBTAIN ALL PERMITS/ APPROVALS. STRUCTURAL ELEMENTS DETAILED BY PRB DESIGN FOR AESTHETIC REFERENCE ONLY.
CHECK ALL DRAWINGS, QUANTITIES AND MATERIALS; REPORT ANY DISCREPANCIES/ ERRORS TO PRB DESIGN.

PAUL BANGAY STUDIO

Group Number	Tree Number	Species	Height Range (above 6m)	Trunk Circum. (m)	Canopy Spread (m)	Health	Structure	Stage	Tree Protection Status	Tree Quality Classification	Arboricultural Recommendation	TPZ AS 4970	D10*	Comments/summary
	238	*Cedrus atlantica - Atlantic Cedar*	12	1.57	8	Poor	Fair	EM	Regulated Tree	Poor	Retain/remove	6.0	4.0	majority trees are dead or are in decline.
	239	*Cedrus atlantica - Atlantic Cedar*	10	0.94	6	Poor	Fair	EM	Regulated Tree	Poor	Retain/remove	3.6	2.4	
	240	*Cedrus atlantica - Atlantic Cedar*	12	0.94	6	Poor	Fair	EM	Regulated Tree	Poor	Retain/remove	3.6	2.4	
	241	*Cedrus atlantica - Atlantic Cedar*	12	1.26	8	Poor	Fair	EM	Regulated Tree	Poor	Retain/remove	4.8	3.2	
	242	*Cedrus atlantica - Atlantic Cedar*	12	1.57	10	Poor	Fair	EM	Regulated Tree	Poor	Retain/remove	6.0	4.0	
	243	*Cedrus atlantica - Atlantic Cedar*	12	1.26	10	Poor	Fair	EM	Regulated Tree	Poor	Retain/remove	4.8	3.2	
	244	*Cedrus atlantica - Atlantic Cedar*	13	1.26	6	Poor	Fair	EM	Regulated Tree	Poor	Retain/remove	4.8	3.2	
	245	*Cedrus atlantica - Atlantic Cedar*	11	0.94	6	Poor	Fair	EM	Regulated Tree	Poor	Retain/remove	3.6	2.4	
	246	*Cedrus atlantica - Atlantic Cedar*	11	0.94	6	Poor	Fair	EM	Regulated Tree	Poor	Retain/remove	3.6	2.4	
	247	*Cedrus atlantica - Atlantic Cedar*	12	0.94	6	Poor	Fair	EM	Regulated Tree	Poor	Retain/remove	3.6	2.4	
	248	*Cedrus atlantica - Atlantic Cedar*	12	0.94	6	Poor	Fair	EM	Regulated Tree	Poor	Retain/remove	3.6	2.4	
	249	*Cedrus atlantica - Atlantic Cedar*	12	0.94	6	Poor	Fair	EM	Regulated Tree	Poor	Retain/remove	3.6	2.4	
	250	*Cedrus atlantica - Atlantic Cedar*	14	1.26	8	Poor	Fair	EM	Regulated Tree	Poor	Retain/remove	4.8	3.2	
	251	*Cedrus atlantica - Atlantic Cedar*	14	0.94	6	Poor	Fair	EM	Regulated Tree	Poor	Retain/remove	3.6	2.4	
	252	*Cedrus atlantica - Atlantic Cedar*	14	1.57	8	Poor	Fair	EM	Regulated Tree	Poor	Retain/remove	6.0	4.0	
	253	*Cedrus atlantica - Atlantic Cedar*	14	1.26	8	Poor	Fair	EM	Regulated Tree	Poor	Retain/remove	4.8	3.2	
	254	*Cedrus atlantica - Atlantic Cedar*	12	0.94	6	Poor	Fair	EM	Regulated Tree	Poor	Retain/remove	3.6	2.4	
	255	*Cedrus atlantica - Atlantic Cedar*	13	1.26	6	Poor	Fair	EM	Regulated Tree	Poor	Retain/remove	4.8	3.2	
	256	*Cedrus atlantica - Atlantic Cedar*	13	1.26	8	Poor	Fair	EM	Regulated Tree	Poor	Retain/remove	4.8	3.2	
	257	*Cedrus atlantica - Atlantic Cedar*	13	1.26	8	Poor	Fair	EM	Regulated Tree	Poor	Retain/remove	4.8	3.2	
	258	*Cedrus atlantica - Atlantic Cedar*	15	1.57	8	Poor	Fair	EM	Regulated Tree	Poor	Retain/remove	6.0	4.0	
	259	*Cedrus atlantica - Atlantic Cedar*	16	1.26	8	Poor	Fair	EM	Regulated Tree	Poor	Retain/remove	4.8	3.2	
	260	*Cedrus atlantica - Atlantic Cedar*	14	1.26	6	Poor	Fair	EM	Regulated Tree	Poor	Retain/remove	4.8	3.2	
	261	*Cedrus atlantica - Atlantic Cedar*	13	1.26	6	Poor	Fair	EM	Regulated Tree	Poor	Retain/remove	4.8	3.2	

13

Group Number	Tree Number	Species	Height Range (above 6m)	Trunk Circum. (m)	Canopy Spread (m)	Health	Structure	Stage	Tree Protection Status	Tree Quality Classification	Arboricultural Recommendation	TPZ AS 4970	D10*	Comments/summary
	262	*Cedrus atlantica - Atlantic*	13	1.26	8	Poor	Fair	EM	Regulated Tree	Poor	Retain/remove	4.8	3.2	
Group 3	263	*Pinus radiata - Monterey Pine*	20	2.51	10			Pest Plant (Weed)		Medium		9.6	6.4	
	264	*Pinus radiata - Monterey Pine*	19	1.57	10			Pest Plant (Weed)		Medium		6.0	4.0	
	265	*Pinus radiata - Monterey Pine*	20	1.88	10			Pest Plant (Weed)		Low	G	7.2	4.8	Deadwood present
	266	*Pinus radiata - Monterey Pine*	18	2.20	12			Pest Plant (Weed)		Medium		8.4	5.6	
Group 1	267	*Cedrus atlantica - Atlantic*	13	1.26	6	Poor	Fair	EM	Regulated Tree	Poor	Retain/remove	4.8	3.2	Supressed top of canopy dead
Group 3	268	*Pinus radiata - Monterey Pine*	23	1.88	12			Pest Plant (Weed)				7.2	4.8	
	269	*Pinus radiata - Monterey Pine*	23	1.88	12			Pest Plant (Weed)				7.2	4.8	
	270	*Pinus radiata - Monterey Pine*	25	1.88	12			Pest Plant (Weed)				7.2	4.8	
	271	*Pinus radiata - Monterey Pine*	24	1.88	8			Pest Plant (Weed)				7.2	4.8	
	272	*Pinus radiata - Monterey Pine*	22	1.88	10			Pest Plant (Weed)				7.2	4.8	
	273	*Pinus radiata - Monterey Pine*	25	2.20	12			Pest Plant (Weed)				8.4	5.6	
	274	*Pinus radiata - Monterey Pine*	25	2.20	12			Pest Plant (Weed)				8.4	5.6	
	275	*Pinus radiata - Monterey Pine*	23	2.20	12			Pest Plant (Weed)				8.4	5.6	
	276	*Pinus radiata - Monterey Pine*	24	2.20	14			Pest Plant (Weed)				8.4	5.6	
	277	*Pinus radiata - Monterey Pine*	24	2.20	12			Pest Plant (Weed)				8.4	5.6	
	278	*Pinus radiata - Monterey Pine*	24	1.57	8			Pest Plant (Weed)				6.0	4.0	
	279	*Pinus radiata - Monterey Pine*	24	2.83	12			Pest Plant (Weed)				10.8	7.2	
	280	*Pinus radiata - Monterey Pine*	24	1.88	10			Pest Plant (Weed)				7.2	4.8	
	281	*Pinus radiata - Monterey Pine*	22	2.20	10			Pest Plant (Weed)				8.4	5.6	
	282	*Pinus radiata - Monterey Pine*	5.5	0.79	10			Pest Plant (Weed)				3.0	2.4	
Group 4	283	*Pinus canariensis - Canary*	24	1.88	12	Good	Good	M	Regulated Tree	High	Retain as a group	7.2	4.8	High quality group
	284	*Pinus canariensis - Canary*	24	2.20	12	Good	Good	M	Regulated Tree	High	Retain as a group	8.4	5.6	
Group 3	285	*Pinus radiata - Monterey Pine*	22	2.51	12			Pest Plant (Weed)				9.6	6.4	

14

Group Number	Tree Number	Species	Height Range (above 6m)	Trunk Circum. (m)	Canopy Spread (m)	Health	Structure	Stage	Tree Protection Status	Tree Quality Classification	Arboricultural Recommendation	TPZ AS 4970	D10*	Comments/summary
	286	*Pinus radiata - Monterey Pine*	25	2.51	12			Pest Plant (Weed)				9.6	6.4	
	287	*Pinus radiata - Monterey Pine*	25	3.14	12			Pest Plant (Weed)				12.0	8.1	
	288	*Pinus radiata - Monterey Pine*	23	2.51	12			Pest Plant (Weed)				9.6	6.4	
	289	*Pinus radiata - Monterey Pine*	23	2.20	12			Pest Plant (Weed)				8.4	5.6	
	290	*Pinus radiata - Monterey Pine*	24	2.51	12			Pest Plant (Weed)				9.6	6.4	
Group 4	291	*Pinus brutiacalambrian pine*	24	2.20	16	Good	Good	M	Regulated Tree	High	Retain as a group	8.4	5.6	HIGH QUALITY GROUP
	292	*Pinus brutiacalambrian pine*	24	2.20	16	Good	Good	M	Regulated Tree	High	Retain as a group	8.4	5.6	
Group 20	293	*Pinus ponderosa - Western*	28	3.14	14	Fair	Good	M	Regulated Tree	High	Retain	12.0	8.1	Drought affected patchy foliage
	294	*Pinus ponderosa - Western*	16.5	2.83	10	Fair	Poor	M	Regulated Tree	Poor	Retain as a group	10.8	7.2	Top of canopy broken off and deadwood.
	295	*Pinus ponderosa - Western*	21.5	2.83	10	Good	Good	M	Regulated Tree	High	Retain	10.8	7.2	Included junction not problem, deadwood present
Street Trees	296	*Cedrus atlantica - Atlantic Cedar*	14.5	2.67	16	Fair	Good	M	Registered	High	Retain	10.2	7.2	REGISTERED TREES - Street trees most drought affected and have thinning canopy
	297	*Cedrus atlantica - Atlantic Cedar*	14	1.26	9	Good	Good	EM	Registered	Medium	Retain	4.8	3.2	
	298	*Cedrus atlantica - Atlantic Cedar*	11.5	1.26	8.5	Good	Good	M	Registered	Medium	Retain	4.8	3.2	
Group 20	299	*Pinus poderosa - Western*	21	1.88	6.5	Good	Good	M	Regulated Tree	High	Retain as a group	7.2	4.8	
	300	*Pinus poderosa - Western*	23.5	2.20	8	Good	Good	M	Regulated Tree	High	Retain as a group	8.4	5.6	
	301	*Pinus poderosa - Western*	23	2.83	8	Good	Good	M	Regulated Tree	High	Retain as a group	10.8	7.2	HIGH QUALITY GROUP- deadwood present.
	302	*Pinus poderosa - Western*	17	1.88	7	Good	Good	M	Regulated Tree	High	Retain as a group	7.2	4.8	
	303	*Pinus poderosa - Western*	15	1.55	7.5	Fair	Good	M	Regulated Tree	Medium	Retain as a group	5.9	4.0	
	304	*Pinus poderosa - Western*	19	2.51	9	Good	Good	M	Regulated Tree	High	Retain as a group	9.6	6.4	
	305	*Cupressus sempervirens 'Stricta'.- Italian Cypress*	12	1.88	7	Very Good	Good	M	Registered	High	Retain	7.2	4.8	High heritage and aesthetic value
	306	*Cupressus sempervirens 'Stricta'.- Italian Cypress*	16	1.88	5	Very Good	Good	M	Registered	High	Retain	7.2	4.8	High heritage and aesthetic value
Group 20	307	*Pinus poderosa - Western*	25	2.83	11.5	Very Good	Good	M	Regulated Tree	Exceptional	Retain as a group	10.8	7.2	Some deadwood, drought affected
	308	*Pinus poderosa - Western*	21	2.04	6.5	Fair	Good	M	Regulated Tree	Medium	Retain as a group	7.8	5.6	Major deadwood, drought affected
	309	*Pinus poderosa - Western*	24	2.20	6.5	Good	Good	M	Regulated Tree	Medium	Retain as a group	8.4	5.6	Some deadwood , included junction

Drought affected and

15

Group Number	Tree Number	Species	Height Range (above 6m)	Trunk Circum. (m)	Canopy Spread (m)	Health	Structure	Stage	Tree Protection Status	Tree Quality Classification	Arboricultural Recommendation	TPZ AS 4970	D10*	Comments/summary
	310	*Pinus poderosa - Western Yellow Pine*	23	1.57	3	Good	Good	M	Regulated Tree	High	Retain	6.0	4.0	Supressed minor deadwood
	311	*Piceaabies - Norway Spruce*	9	0.63	3	Poor	Good	EM	Regulated Tree	Poor	Retain	2.4	1.6	Dieback in conopy, supressed
	312	*Pinus poderosa - Western Yellow Pine*	16	1.88	9	Fair	Good	M	Regulated Tree	Medium	Retain as a group	7.2	4.8	Deadwood present
	313	*Pinus poderosa - Western Yellow Pine*	14.8	1.57	9	Good		M	Regulated Tree	High	Retain as a group	6.0	4.0	
	314	*Pinus poderosa - Western Yellow Pine*	17.8	2.36	6.5	Good	Good	M	Regulated Tree	High	Retain as a group	9.0	6.4	
	315	*Pinus poderosa - Western Yellow Pine*	18	1.88	8	Good	Good	M	Regulated Tree	High	Retain as a group	7.2	4.8	Deadwood present, included junction
	316	*Pinus poderosa - Western Yellow Pine*	16.5	2.20	8.5			M	Regulated Tree	Medium	Retain as a group	8.4	5.6	Drought affected and deadwood present
	317	*Pinus poderosa - Western Yellow Pine*	15.5	1.57	9.5	Good	Good	M	Regulated Tree	Medium	Retain as a group	6.0	4.0	Deadwood present drought affected
	318	*Pinus poderosa - Western Yellow Pine*	17	1.57	7	Good	Good	M	Regulated Tree	Medium	Retain as a group	6.0	4.0	Deadwood present drought affected
	319	*Pinus poderosa - Western Yellow Pine*	14	1.57	9	Good	Good	M	Regulated Tree	High	Retain as a group	6.0	4.0	Minor deadwood
	320	*Pinus species*	19	2.51	13	Very Good	Very Good	M	Regulated Tree	Exceptional	Retain as a group	9.6	6.4	Unsure of species
	321	*Pinus poderosa - Western Yellow Pine*	17.5	1.41	7	Fair	Good	M	Regulated Tree	High	Retain/remove	5.4	4.0	

Group Number	Tree Number	Species	Height Range (above 6m)	Trunk Circum. (m)	Canopy Spread (m)	Health	Structure	Stage	Tree Protection Status	Tree Quality Classification	Arboricultural Recommendation	TPZ AS 4970	D10*	Comments/summary
Group 21	322	*Quercus palustris - Pin Oak*	11	1.10	11	Fair	Good	EM	Regulated Tree	Medium	Retain/remove	4.2	3.2	POOR QUALITY GROUP - Drought affected, poor form dead tips.
	323	*Quercus palustris - Pin Oak*	13.5	1.00	7	Fair	Good	EM	Regulated Tree	Medium	Retain/remove	3.8	2.4	
	324	*Quercus palustris - Pin Oak*	10.5	1.10	6	Fair	Good	EM	Regulated Tree	Medium	Retain/remove	4.2	3.2	
	325	*Cupressus sempervirens 'Stricta'.- Italian Cypress*	12	3.14	5	Good	Good	M	Regulated Tree	High	Retain	12.0	8.1	
	326	*Cupressus sempervirens 'Stricta'.- Italian Cypress*	13	2.51	4.5	Good	Good	M	Regulated Tree	High	Retain	9.6	6.4	
	327	*Coryimbiamaculata*	14	1.26	12	Good	Fair	EM	Regulated Tree	High	Retain as a group	4.8	3.2	Minor deadwood present
	328	*Coryimbiamaculata*	14	1.26	10	Good	Good	EM	Regulated Tree	High	Retain as a group	4.8	3.2	Minor deadwood present scarring at base
	329	*Cedrus deodara - Deod*	14.5	0.94	6.5	Good	Good	EM	Regulated Tree	High	Retain	3.6	2.4	Good
	330	*Cedrus deodara - Deod*	15.5	0.94	7.5	Good	Fair	EM	Regulated Tree	Medium	Retain	3.6	2.4	Narrow folk
	331	*Eucalyptus melliodora*	17.5	2.67	14	Good	Good	M	Regulated Tree	High	Retain	10.2	7.2	Minor deadwood, included junction
	332	*Cedrus deodara - Deod*	14	1.57	9.5	Good	Good	EM	Regulated Tree	Medium	Retain	6.0	4.0	
Group 20	333	*Pinus species*	19.5	1.57	8	Good	Good	M	Regulated Tree	High	Retain as a group	6.0	4.0	HIGH QUALITY GROUP, deadwood present over

16

Group Number	Tree Number	Species	Height Range (above 6m)	Trunk Circum. (m)	Canopy Spread (m)	Health	Structure	Stage	Tree Protection Status	Tree Quality Classification	Arboricultural Recommendation	TPZ AS 4970	D10*	Comments/summary
	334	*Pinus ponderosa - Western Yellow Pine*	19.5	1.88	9	Good	Good	M	Regulated Tree	High	Retain as a group	7.2	4.8	carpark, remove deadwood. drought affected
	335	*Pinus ponderosa - Western Yellow Pine*	19.8	1.88	7.5	Fair	Good	M	Regulated Tree	Medium	Retain as a group	7.2	4.8	
	336	*Pinus ponderosa - Western Yellow Pine*	18	1.57	7	Good	Good	M	Regulated Tree	Medium	Retain as a group	6.0	4.0	
	337	*Pinus species*	16.7	1.88	6.5	Good	Good	M	Regulated Tree	Medium	Retain	7.2	4.8	
Group 21	338	*Quercus palustris - Pin Oak*	12.5	1.26	7	Fair	Good	EM	Regulated Tree	Medium	Retain/remove	4.8	3.2	POOR QUALITY GROUP - Drought affected, poor form dead tips
	339	*Quercus palustris - Pin Oak*	12.2	1.41	8	Fair	Good	EM	Regulated Tree	Medium	Retain/remove	5.4	4.0	
	340	*Quercus palustris - Pin Oak*	11.7	1.41	11	Fair	Good	EM	Regulated Tree	Medium	Retain/remove	5.4	4.0	
	341	*Quercus palustris - Pin Oak*	8.5	1.41	7	Fair	Very Poor	EM	Regulated Tree	Medium	Retain/remove	5.4	4.0	
	342	*Quercus palustris - Pin Oak*	10.7	1.26	7.5	Fair	Good	EM	Regulated Tree	Medium	Retain/remove	4.8	3.2	
	343	*Quercus palustris - Pin Oak*	11.5	1.26	9	Fair	Good	EM	Regulated Tree	Medium	Retain/remove	4.8	3.2	
	344	*Quercus palustris - Pin Oak*	10	0.94	5	Fair	Good		Regulated Tree		Retain/remove	3.6	2.4	
	345	*Quercus palustris - Pin Oak*	14.7	1.26	6.5	Fair	Good	EM	Regulated Tree	Medium	Retain/remove	4.8	3.2	
	346	*Quercus palustris - Pin Oak*	14	1.57	13	Fair	Good	EM	Regulated Tree	Medium	Retain/remove	6.0	4.0	
	347	*Quercus palustris - Pin Oak*	13.2	1.16	8	Fair	Good	EM	Regulated Tree	Medium	Retain/remove	4.4	3.2	
	348	*Cupressus sp.- Cypress*	13.7	1.88	9	Good	Good	EM	Regulated Tree	Medium	Retain	7.2	4.8	
Group 20	349	*Pinus poderosa - Western Yellow Pine*	18	1.55	10	Good	Good	M	Regulated Tree	High	Retain	5.9	4.0	Tight fork
	350	*Eucalyptus maidenii*	17.5	1.41	11.5				Regulated Tree	High	Retain	5.4	4.0	Tree Missing
	351	*Eucalyptus maidenii*	18.5	1.57	12	Good	Good	EM	Regulated Tree	High	Retain	6.0	4.0	Evidence of past branch failure
	352	*Piceaabies - Norway Spruce*	10.2	1.57	8	Good	Fair	EM	Regulated Tree	Medium	Retain/remove	6.0	4.0	Drought affected. Near powerlines
	353	*Cedrus deodara - Deod*	11.5	1.26	8	Good	Fair	EM	Regulated Tree	Medium	Retain	4.8	3.2	
	354	*Acacia dealbata - Silver Wattle*	6.7	0.94	8	Poor	Poor	EM	Not Regulated	Poor	Retain/remove	3.6	2.4	In decline
	355	*Cedrus deodara - Deod*	9.7	1.57	10	Good	Good	EM	Regulated Tree	High	Retain	6.0	4.0	
Group 19	356	*Pinus ponderosa - Western Yellow Pine*	13.2	1.26	7	Good	Good		Regulated Tree	High	Retain as a group	4.8	3.2	HIGH QUALITY GROUP - deadwood present and drought affected.
	357	*Pinus ponderosa - Western Yellow Pine*	16	1.88	6.5	Good	Good		Regulated Tree	High	Retain as a group	7.2	4.8	

17

Group Number	Tree Number	Species	Height Range (above 6m)	Trunk Circum. (m)	Canopy Spread (m)	Health	Structure	Stage	Tree Protection Status	Tree Quality Classification	Arboricultural Recommendation	TPZ AS 4970	D10*	Comments/summary
	358	*Pinus ponderosa - Western*	14.5	1.10	7	Good	Good		Regulated Tree	High	Retain as a group	4.2	3.2	
	359	*Pinus ponderosa - Western*	15.5	1.88	9	Good	Good		Regulated Tree	High	Retain as a group	7.2	4.8	
	360	*Pinus ponderosa - Western*	15.2	1.57	6	Good	Good		Regulated Tree	High	Retain as a group	6.0	4.0	
	361	*Pinus ponderosa - Western*	6	0.31	3	Good	Good		Not Regulated	High	Retain as a group	1.2	0.8	
	362	*Pinus ponderosa - Western*	14.7	1.10	5	Good	Good		Regulated Tree	High	Retain as a group	4.2	3.2	
	363	*Pinus ponderosa - Western*	12	0.94	4	Good	Good	J	Regulated Tree	High	Retain as a group	3.6	2.4	
	364	*Pinus ponderosa - Western*	13	0.94	5	Good	Good	J	Regulated Tree	High	Retain as a group	3.6	2.4	
	365	*Pinus ponderosa - Western*	14.5	2.51	14	Good	Good		Regulated Tree	High	Retain as a group	9.6	6.4	
	366	*Pinus species*	15	1.10	5.5	Good	Good		Regulated Tree	High	Retain as a group	4.2	3.2	
	367	*Pinus ponderosa - Western*	18	2.67	9.5	Good	Good		Regulated Tree	High	Retain as a group	10.2	7.2	
	368	*Eucalyptus sideroxylon - Red*	16	2.30	16	Good	Good	M	Regulated Tree	High	Retain	8.8	5.6	
Group 18	369	*Pinus pinea - Stone Pine*	12.5	1.57	8	Fair	Fair	EM	Regulated Tree	Medium	Retain/remove	6.0	4.0	LOW QUALITY GROUP - High-density planting. Deadwood is prevalent throughout the canopy. Numerous dead trees are present, with several exhibiting lean and partial root plate failure
	370	*Pinus pinea - Stone Pine*	11.2	1.57	9				Regulated Tree			6.0	4.0	
	371	*Pinus pinea - Stone Pine*	11.7	1.41	6				Regulated Tree			5.4	4.0	
	372	*Pinus pinea - Stone Pine*	15	2.51	8				Regulated Tree			9.6	6.4	
	373	*Pinus pinea - Stone Pine*	11	1.26	7				Regulated Tree			4.8	3.2	
	374	*Pinus pinea - Stone Pine*	11	0.94	5				Regulated Tree			3.6	2.4	
	375	*Pinus pinea - Stone Pine*		0.79					Regulated Tree			3.0	2.4	
	376	*Pinus pinea - Stone Pine*	12		4				Regulated Tree			0.0	0.0	
	377	*Pinus pinea - Stone Pine*	15	1.57	8				Regulated Tree			6.0	4.0	
	378	*Pinus pinea - Stone Pine*	14	1.26	6				Regulated Tree			4.8	3.2	
	379	*Pinus pinea - Stone Pine*	12.7	1.26	4				Regulated Tree			4.8	3.2	
	380	*Pinus pinea - Stone Pine*		0.79					Regulated Tree			3.0	2.4	
	381	*Pinus pinea - Stone Pine*	13.5		3				Regulated Tree			0.0	0.0	

18

Group Number	Tree Number	Species	Height Range (above 6m)	Trunk Circum. (m)	Canopy Spread (m)	Health	Structure	Stage	Tree Protection Status	Tree Quality Classification	Arboricultural Recommendation	TPZ AS 4970	D10*	Comments/summary
	382	*Pinus pinea - Stone Pine*	15	1.26	8				Regulated Tree			4.8	3.2	
	383	*Pinus pinea - Stone Pine*	12	0.94	4				Regulated Tree			3.6	2.4	
	384	*Pinus pinea - Stone Pine*	15	1.26	6				Regulated Tree			4.8	3.2	
	385	*Pinus pinea - Stone Pine*		1.10					Regulated Tree			4.2	3.2	
	386	*Pinus pinea - Stone Pine*	13.2		5				Regulated Tree			0.0	0.0	
	387	*Pinus pinea - Stone Pine*	13.5	1.10	5				Regulated Tree			4.2	3.2	
	388	*Pinus pinea - Stone Pine*	14.5	1.26	6				Regulated Tree			4.8	3.2	
	389	*Pinus pinea - Stone Pine*		0.94					Regulated Tree			3.6	2.4	
	390	*Pinus pinea - Stone Pine*	13.2		5				Regulated Tree			0.0	0.0	
	391	*Pinus pinea - Stone Pine*	13.2	0.94	7				Regulated Tree			3.6	2.4	
	392	*Pinus pinea - Stone Pine*	14.5	1.57	8				Regulated Tree			6.0	4.0	
	393	*Pinus pinea - Stone Pine*	16	1.26	5				Regulated Tree			4.8	3.2	
	394	*Pinus pinea - Stone Pine*	16	1.26	7				Regulated Tree			4.8	3.2	
	395	*Pinus pinea - Stone Pine*	16.5	1.26	6				Regulated Tree			4.8	3.2	
	396	*Pinus pinea - Stone Pine*	13	1.26	4.5				Regulated Tree			4.8	3.2	
	397	*Pinus pinea - Stone Pine*	13.7	1.26	5				Regulated Tree			4.8	3.2	
	398	*Pinus pinea - Stone Pine*	14.7	0.94	5				Regulated Tree			3.6	2.4	
	399	*Pinus pinea - Stone Pine*	15.2	1.10	5				Regulated Tree			4.2	3.2	
	400	*Pinus pinea - Stone Pine*		1.26					Regulated Tree			4.8	3.2	
	401	*Pinus pinea - Stone Pine*	14.5		6				Regulated Tree			0.0	0.0	
	402	*Pinus pinea - Stone Pine*	13	0.94	6				Regulated Tree			3.6	2.4	
	403	*Pinus pinea - Stone Pine*	14.5	1.10	8				Regulated Tree			4.2	3.2	
	404	*Pinus pinea - Stone Pine*	16.5	1.26	7				Regulated Tree			4.8	3.2	
	405	*Pinus pinea - Stone Pine*	15	1.26	5				Regulated Tree			4.8	3.2	

Group Number	Tree Number	Species	Height Range (above 6m)	Trunk Circum. (m)	Canopy Spread (m)	Health	Structure	Stage	Tree Protection Status	Tree Quality Classification	Arboricultural Recommendation	TPZ AS 4970	D10*	Comments/summary
	406	*Pinus pinea - Stone Pine*	14.7	1.88	12				Regulated Tree			7.2	4.8	
	407	*Pinus pinea - Stone Pine*	17.5	2.04	10				Regulated Tree			7.8	5.6	
	408	*Pinus pinea - Stone Pine*		1.26					Regulated Tree			4.8	3.2	
	409	*Pinus pinea - Stone Pine*	17		5.5				Regulated Tree			0.0	0.0	
	410	*Pinus pinea - Stone Pine*	17	1.26	7				Regulated Tree			4.8	3.2	
	411	*Pinus pinea - Stone Pine*	16.7	1.26	7				Regulated Tree			4.8	3.2	
	412	*Pinus pinea - Stone Pine*	16.2	1.26	5				Regulated Tree			4.8	3.2	
	413	*Pinus pinea - Stone Pine*	15	2.20	14				Regulated Tree			8.4	5.6	
	414	*Pinus pinea - Stone Pine*	16.7	2.20	10				Regulated Tree			8.4	5.6	
	415	*Pinus pinea - Stone Pine*	16.5	1.73	9.5				Regulated Tree			6.6	4.8	
	416	*Pinus pinea - Stone Pine*		0.79					Regulated Tree			3.0	2.4	
	417	*Pinus pinea - Stone Pine*	13.5		3				Regulated Tree			0.0	0.0	
	418	*Pinus pinea - Stone Pine*		1.57					Regulated Tree			6.0	4.0	
	419	*Pinus pinea - Stone Pine*	13.5		7				Regulated Tree			0.0	0.0	
	420	*Pinus pinea - Stone Pine*		0.94					Regulated Tree			3.6	2.4	
	421	*Pinus pinea - Stone Pine*	13		4				Regulated Tree			0.0	0.0	
	422	*Pinus pinea - Stone Pine*	14.5	1.26	9				Regulated Tree			4.8	3.2	
	423	*Pinus pinea - Stone Pine*		0.79					Regulated Tree			3.0	2.4	
	424	*Pinus pinea - Stone Pine*	10		4.5				Regulated Tree			0.0	0.0	
	425	*Pinus pinea - Stone Pine*	13.5	0.94	4.5				Regulated Tree			3.6	2.4	
	426	*Pinus pinea - Stone Pine*		1.26					Regulated Tree			4.8	3.2	
	427	*Pinus pinea - Stone Pine*	15		5				Regulated Tree			0.0	0.0	
	428	*Pinus pinea - Stone Pine*		1.26					Regulated Tree			4.8	3.2	
	429	*Pinus pinea - Stone Pine*	13.7		5.5				Regulated Tree			0.0	0.0	

20

Group Number	Tree Number	Species	Height Range (above 6m)	Trunk Circum. (m)	Canopy Spread (m)	Health	Structure	Stage	Tree Protection Status	Tree Quality Classification	Arboricultural Recommendation	TPZ AS 4970	D10*	Comments/summary
	430	*Pinus pinea - Stone Pine*		1.57					Regulated Tree			6.0	4.0	
	431	*Pinus pinea - Stone Pine*	13		8				Regulated Tree			0.0	0.0	
	432	*Pinus pinea - Stone Pine*		1.10					Regulated Tree	Tree removed		4.2	3.2	
	433	*Pinus pinea - Stone Pine*	13.5		7				Regulated Tree			0.0	0.0	
	434	*Pinus pinea - Stone Pine*	13.7	1.10	5.5				Regulated Tree			4.2	3.2	
	435	*Pinus pinea - Stone Pine*	13.7	1.57	9				Regulated Tree			6.0	4.0	
	436	*Pinus pinea - Stone Pine*	15	1.57	9				Regulated Tree			6.0	4.0	
	437	*Pinus pinea - Stone Pine*		1.26					Regulated Tree			4.8	3.2	
	438	*Pinus pinea - Stone Pine*	15.2		6				Regulated Tree			0.0	0.0	
	439	*Pinus pinea - Stone Pine*		1.88					Regulated Tree			7.2	4.8	
	440	*Pinus pinea - Stone Pine*	16		8				Regulated Tree			0.0	0.0	
	441	*Pinus pinea - Stone Pine*		1.88					Regulated Tree			7.2	4.8	
	442	*Pinus pinea - Stone Pine*	14		10				Regulated Tree			0.0	0.0	
	443	*Pinus pinea - Stone Pine*		1.73					Regulated Tree			6.6	4.8	
	444	*Pinus pinea - Stone Pine*	14		8				Regulated Tree			0.0	0.0	
	445	*Pinus pinea - Stone Pine*	15	2.04	13				Regulated Tree			7.8	5.6	
	446	*Pinus pinea - Stone Pine*		1.88					Regulated Tree	Tree removed		7.2	4.8	
	447	*Pinus pinea - Stone Pine*	15		10				Regulated Tree			0.0	0.0	
	448	*Pinus pinea - Stone Pine*	15	1.73	9.5				Regulated Tree			6.6	4.8	
	449	*Pinus pinea - Stone Pine*	15	2.20	11				Regulated Tree	Tree removed		8.4	5.6	
	450	*Pinus pinea - Stone Pine*		1.57					Regulated Tree			6.0	4.0	
	451	*Pinus pinea - Stone Pine*	15		5.5				Regulated Tree			0.0	0.0	
	452	*Pinus pinea - Stone Pine*	16	1.57	9				Regulated Tree			6.0	4.0	
	453	*Pinus pinea - Stone Pine*		1.41					Regulated Tree			5.4	4.0	

21

Group Number	Tree Number	Species	Height Range (above 6m)	Trunk Circum. (m)	Canopy Spread (m)	Health	Structure	Stage	Tree Protection Status	Tree Quality Classification	Arboricultural Recommendation	TPZ AS 4970	D10*	Comments/summary
	454	*Pinus pinea - Stone Pine*	15		5.5				Regulated Tree			0.0	0.0	
	455	*Pinus pinea - Stone Pine*		1.10					Regulated Tree			4.2	3.2	
	456	*Pinus pinea - Stone Pine*	15		5				Regulated Tree			0.0	0.0	
	457	*Pinus pinea - Stone Pine*		1.41					Regulated Tree			5.4	4.0	
	458	*Pinus pinea - Stone Pine*	15		7.5				Regulated Tree			0.0	0.0	
	459	*Pinus pinea - Stone Pine*		2.20					Regulated Tree			8.4	5.6	
	460	*Pinus pinea - Stone Pine*	15		9.5				Regulated Tree	Tree removed		0.0	0.0	
	461	*Pinus pinea - Stone Pine*		1.88					Regulated Tree			7.2	4.8	
	462	*Pinus pinea - Stone Pine*	16		8				Regulated Tree	Tree removed		0.0	0.0	
	463	*Pinus pinea - Stone Pine*		2.20					Regulated Tree			8.4	5.6	
	464	*Pinus pinea - Stone Pine*	16		11				Regulated Tree			0.0	0.0	
	465	*Pinus pinea - Stone Pine*		1.57					Regulated Tree			6.0	4.0	
	466	*Pinus pinea - Stone Pine*	16		5				Regulated Tree			0.0	0.0	
	467	*Pinus pinea - Stone Pine*		1.57					Regulated Tree			6.0	4.0	
	468	*Pinus pinea - Stone Pine*	16		6				Regulated Tree			0.0	0.0	
	469	*Pinus pinea - Stone Pine*	16	1.41	8				Regulated Tree			5.4	4.0	
	470	*Pinus pinea - Stone Pine*		1.570796327					Regulated Tree			6.0	4.0	
	471	*Pinus pinea - Stone Pine*	16		9				Regulated Tree			0.0	0.0	
	472	*Pinus pinea - Stone Pine*	16	1.413716694	6.5				Regulated Tree			5.4	4.0	
	473	*Pinus pinea - Stone Pine*		1.570796327					Regulated Tree			6.0	4.0	
	474	*Pinus pinea - Stone Pine*	16		7				Regulated Tree			0.0	0.0	
	475	*Casuarina sp - She-oak*	6	0.785398163	6				Not Regulated			3.0	2.4	
	476	*Pinus pinea - Stone Pine*	16	2.199114858	12				Regulated Tree			8.4	5.6	
	477	*Pinus pinea - Stone Pine*	16	2.199114858	14				Regulated Tree			8.4	5.6	

PAUL BANGAY
THE STUDIO

54 GWYNNE STREET CREMORNE
VIC 3121 AUSTRALIA | T +61 3 9070 6050
PRB DESIGN PTY LTD | ABN 20 066 291 076
PAULBANGAY.COM

ISSUE DATE 6th May 2026
PROJECT STATUS CONCEPT DESIGN
SCALE 1:500 @ A0 PAGE 5 of 18
ARCHITECT STEWART ARCHITECTURE
LANDSCAPE ARCHITECT EH CHECKED BY PB
CLIENT BLOC
PROJECT FORESTRY PLACE, YARRALUMLA ACT
SITE INSPECTED 23/03/2026
SITE AREA/ LEVEL 260225 JOB NO.
L006 SHEET NO. A ISSUE

LANDSCAPE MANAGEMENT AND PROTECTION PLAN (2)
DRAWING TITLE:

[NOT FOR CONSTRUCTION]

VERIFY ALL DIMENSIONS ON SITE PRIOR TO COMMENCEMENT OF WORKS/ ORDERING. DO NOT SCALE FROM REPRODUCED/ COPIED DRAWINGS. USE ORIGINAL PLOT ONLY.
CONTRACTOR AND CLIENT TO OBTAIN ALL PERMITS/ APPROVALS. STRUCTURAL ELEMENTS DETAILED BY PRB DESIGN FOR AESTHETIC REFERENCE ONLY.
CHECK ALL DRAWINGS, QUANTITIES AND MATERIALS; REPORT ANY DISCREPANCIES/ ERRORS TO PRB DESIGN.

Group Number	Tree Number	Species	Height Range (above 6m)	Trunk Circum. (m)	Canopy Spread (m)	Health	Structure	Stage	Tree Protection Status	Tree Quality Classification	Arboricultural Recommendation	TPZ AS 4970	D10*	Comments/summary
478		*Pinus pinea - Stone Pine*	16	1.570796327	6			Regulated Tree				6.0	4.0	
479		*Pinus pinea - Stone Pine*	16	1.884955592	10			Regulated Tree				7.2	4.8	
480		*Pinus pinea - Stone Pine*	16	2.042035225	12			Regulated Tree				7.8	5.6	
481		*Pinus pinea - Stone Pine*	16	1.884955592	11			Regulated Tree				7.2	4.8	
482		*Pinus pinea - Stone Pine*	17	2.670353756	14			Regulated Tree				10.2	7.2	
483		*Pinus pinea - Stone Pine*	16	2.042035225	13			Regulated Tree				7.8	5.6	
484		*Pinus pinea - Stone Pine*	1.727875959					Regulated Tree				6.6	4.8	
485		*Pinus pinea - Stone Pine*	15	8				Regulated Tree		Tree removed		0.0	0.0	
486		*Pinus pinea - Stone Pine*	2.042035225					Regulated Tree				7.8	5.6	
487		*Pinus pinea - Stone Pine*	16	7.5				Regulated Tree		Tree removed		0.0	0.0	
488		*Pinus pinea - Stone Pine*	1.570796327					Regulated Tree				6.0	4.0	
489		*Pinus pinea - Stone Pine*	16	5				Regulated Tree				0.0	0.0	
490		*Pinus pinea - Stone Pine*	16	2.199114858	11			Regulated Tree		Tree removed		8.4	5.6	
491		*Pinus pinea - Stone Pine*	2.35619449					Regulated Tree				9.0	6.4	
492		*Pinus pinea - Stone Pine*	16	7				Regulated Tree				0.0	0.0	
493		*Pinus pinea - Stone Pine*	18	2.513274123	13			Regulated Tree				9.6	6.4	
494		*Pinus pinea - Stone Pine*	2.199114858					Regulated Tree				8.4	5.6	
495		*Pinus pinea - Stone Pine*	17	7.5				Regulated Tree				0.0	0.0	
496		*Pinus pinea - Stone Pine*	18	2.670353756	16			Regulated Tree				10.2	7.2	
497		*Pinus pinea - Stone Pine*	19	4.08407045	23			Regulated Tree				15.6	10.5	
498		*Pinus pinea - Stone Pine*	9	1.570796327	6			Regulated Tree				6.0	4.0	
499		*Pinus pinea - Stone Pine*	6	0.314159265	3			Regulated Tree				1.2	0.8	
500		*Pinus radiata - Monterey Pine*	16	2.670353756	12			Pest Plant (Weed)				10.2	7.2	
501		*Pinus radiata - Monterey Pine*	19	3.455751919	13			Pest Plant (Weed)				13.2	8.9	

Group Number	Tree Number	Species	Height Range (above 6m)	Trunk Circum. (m)	Canopy Spread (m)	Health	Structure	Stage	Tree Protection Status	Tree Quality Classification	Arboricultural Recommendation	TPZ AS 4970	D10*	Comments/summary
502		*Pinus radiata - Monterey Pine*	6	0.628318531	4.5			Pest Plant (Weed)				2.4	1.6	
503		*Pinus radiata - Monterey Pine*	6	0.314159265	3			Pest Plant (Weed)				1.2	0.8	
504		*Pinus radiata - Monterey Pine*	13	1.884955592	8			Pest Plant (Weed)				7.2	4.8	
505		*Pinus radiata - Monterey Pine*	4	0.628318531	5			Pest Plant (Weed)				2.4	1.6	
506		*Pinus radiata - Monterey Pine*	13	1.256637061	7			Pest Plant (Weed)				4.8	3.2	
507		*Pinus radiata - Monterey Pine*	13	1.099557429	4.5			Pest Plant (Weed)				4.2	3.2	
508		*Pinus radiata - Monterey Pine*	8	0.471238898	4			Pest Plant (Weed)				1.8	1.6	
509		*Pinus radiata - Monterey Pine*	15	1.256637061	8			Pest Plant (Weed)				4.8	3.2	
510		*Pinus radiata - Monterey Pine*	15	0.628318531	3			Pest Plant (Weed)				2.4	1.6	
511		*Pinus radiata - Monterey Pine*	15	0.942477796	8			Pest Plant (Weed)				3.6	2.4	
512		*Pinus radiata - Monterey Pine*	15	1.099557429	9			Pest Plant (Weed)				4.2	3.2	
513		*Pinus radiata - Monterey Pine*	15	0.628318531	6			Pest Plant (Weed)				2.4	1.6	
514		*Pinus radiata - Monterey Pine*	5	0.314159265	5			Pest Plant (Weed)		Tree removed		1.2	0.8	
515		*Pinus radiata - Monterey Pine*	5	0.314159265	5			Pest Plant (Weed)		Tree removed		1.2	0.8	
516		*Pinus radiata - Monterey Pine*	17	1.256637061	9			Pest Plant (Weed)		Tree removed		4.8	3.2	
517		*Pinus radiata - Monterey Pine*	18	1.570796327	7			Pest Plant (Weed)		Tree removed		6.0	4.0	
518		*Pinus radiata - Monterey Pine*	19	1.256637061	7			Pest Plant (Weed)		Tree removed		4.8	3.2	
519		*Pinus radiata - Monterey Pine*	19	1.413716694	12			Pest Plant (Weed)		Tree removed		5.4	4.0	
520		*Pinus radiata - Monterey Pine*	19	1.256637061	9			Pest Plant (Weed)		Tree removed		4.8	3.2	
521		*Pinus radiata - Monterey Pine*	18	1.884955592	15			Pest Plant (Weed)		Tree removed		7.2	4.8	
522		*Pinus radiata - Monterey Pine*	5	0.314159265	4			Pest Plant (Weed)		Tree removed		1.2	0.8	
523		*Pinus radiata - Monterey Pine*	15	0.628318531	5			Pest Plant (Weed)		Tree removed		2.4	1.6	
524		*Pinus radiata - Monterey Pine*	5	0.628318531	3.5			Pest Plant (Weed)		Tree removed		2.4	1.6	
525		*Pinus radiata - Monterey Pine*	5	0.314159265	3.5			Pest Plant (Weed)		Tree removed		1.2	0.8	

Group Number	Tree Number	Species	Height Range (above 6m)	Trunk Circum. (m)	Canopy Spread (m)	Health	Structure	Stage	Tree Protection Status	Tree Quality Classification	Arboricultural Recommendation	TPZ AS 4970	D10*	Comments/summary
526		*Pinus radiata - Monterey Pine*	15	1.099557429	6			Pest Plant (Weed)		Tree removed		4.2	3.2	
527		*Pinus radiata - Monterey Pine*	15	1.256637061	6			Pest Plant (Weed)		Tree removed		4.8	3.2	
528		*Pinus radiata - Monterey Pine*	7	0.471238898	3			Pest Plant (Weed)		Tree removed		1.8	1.6	
529		*Pinus radiata - Monterey Pine*	9	1.256637061	4			Pest Plant (Weed)		Tree removed		4.8	3.2	
530		*Pinus radiata - Monterey Pine*	20	1.884955592	6			Pest Plant (Weed)		Tree removed		7.2	4.8	
531		*Pinus radiata - Monterey Pine*	20	2.35619449	8			Pest Plant (Weed)		Tree removed		9.0	6.4	
532		*Pinus radiata - Monterey Pine*	20	2.199114858	11			Pest Plant (Weed)		Tree removed		8.4	5.6	
533		*Pinus radiata - Monterey Pine*	20	1.570796327	9			Pest Plant (Weed)		Tree removed		6.0	4.0	
534		*Pinus radiata - Monterey Pine*	20	2.199114858	9			Pest Plant (Weed)		Tree removed		8.4	5.6	
535		*Pinus radiata - Monterey Pine*	0.471238898					Pest Plant (Weed)		Tree removed		1.8	1.6	
536		*Pinus radiata - Monterey Pine*		2.5				Pest Plant (Weed)		Tree removed		0.0	0.0	
537		*Pinus radiata - Monterey Pine*	6	0.314159265	5			Pest Plant (Weed)		Tree Removed		1.2	0.8	
538		*Pinus radiata - Monterey Pine*	15	1.884955592	7			Pest Plant (Weed)				7.2	4.8	
539		*Pinus radiata - Monterey Pine*	15	1.256637061	6			Pest Plant (Weed)				4.8	3.2	
540		*Crataegusmonogyna- English Hawthorn*	9	0.471238898	3			Pest Plant (Weed)				1.8	1.6	
Group 18	541	*Pinus pinea - Stone Pine*	14	1.570796327	9			Regulated Tree				6.0	4.0	
542		*Crataegusmonogyna- English Hawthorn*	9	1.570796327	5			Pest Plant (Weed)				6.0	4.0	
543		*Crataegusmonogyna- English Hawthorn*	9	1.884955592	8			Pest Plant (Weed)				7.2	4.8	
	544	*Eucalyptus sp. - Gum Tree*	7	1.256637061	6			Not Regulated				4.8	3.2	No tree group present at recorded location
		Eucalyptus sp. - Gum Tree	20	1.884955592	8			Regulated Tree				7.2	4.8	
546		*Eucalyptus sp. - Gum Tree*	17	0.785398163	2.5			Regulated Tree				3.0	2.4	
Group 17	547	*Eucalyptus sp. - Gum Tree*	17	1.099557429	4			Tree				4.2	3.2	
548		*Eucalyptus sp. - Gum Tree*	0.785398163									3.0	2.4	
549		*Eucalyptus sp. - Gum Tree*	8	5				Regulated Tree				0.0	0.0	
550		*Eucalyptus sp. - Gum Tree*	12	1.256637061	8			Regulated Tree				4.8	3.2	

Regulated

Group Number	Tree Number	Species	Height Range (above 6m)	Trunk Circum. (m)	Canopy Spread (m)	Health	Structure	Stage	Tree Protection Status	Tree Quality Classification	Arboricultural Recommendation	TPZ AS 4970	D10*	Comments/summary
	551	*Eucalyptus sp. - Gum Tree*	7	0.314159265	3				Not Regulated			1.2	0.8	
	552	*Eucalyptus sp. - Gum Tree*	10	1.727875959	7				Not Regulated			6.6	4.8	
	553	*Eucalyptus sp. - Gum Tree*	10	1.099557429	5				Not Regulated			4.2	3.2	
	554	*Eucalyptus sp. - Gum Tree*	10	0.314159265	2.5				Not Regulated			1.2	0.8	
	555	*Eucalyptus sp. - Gum Tree*	7	0.314159265	2.5				Not Regulated			1.2	0.8	
	556	*Eucalyptus sp. - Gum Tree*	7	0.785398163	4				Not Regulated			3.0	2.4	
	557	*Eucalyptus sp. - Gum Tree*	7	0.314159265	2				Not Regulated			1.2	0.8	
	558	*Eucalyptus sp. - Gum Tree*	6.5	0.628318531	2.5				Not Regulated			2.4	1.6	
	559	*Eucalyptus sp. - Gum Tree*	13	0.471238898	1				Regulated Tree			1.8	1.6	
	560	*Eucalyptus sp. - Gum Tree*	8	1.256637061	3				Regulated Tree			4.8	3.2	
	561	*Eucalyptus sp. - Gum Tree*	8	1.570796327	3.5				Regulated Tree			6.0	4.0	
	562	*Eucalyptus sp. - Gum Tree*	16	0.942477796	3				Regulated Tree			3.6	2.4	
	563	*Eucalyptus sp. - Gum Tree*	12	0.942477796	1.5				Regulated Tree			3.6	2.4	
	564	*Eucalyptus sp. - Gum Tree*	17	1.570796327	6				Regulated Tree			6.0	4.0	
	565	*Eucalyptus sp. - Gum Tree*	15	0.785398163	3				Regulated Tree			3.0	2.4	
	566	*Eucalyptus sp. - Gum Tree*	13	0.785398163	4.5				Regulated Tree			3.0	2.4	
	567	*Eucalyptus albens - White Box*	20.5	2.984513021	20	Good	Good	M	Regulated Tree	Exceptional	Retain	11.4	8.1	EXCEPTIONAL QUALITY TREE
	568	*Eucalyptus melliodora - Yellow Box*	13	0.628318531	5	Good	Very Poor	J	Regulated Tree	Poor	Retain/remove	2.4	1.6	Stump regrowth
	569	*Eucalyptus elata - River Peppermint Gum*	24.2	4.08407045	20	Good	Fair	M	Regulated Tree	Medium	Retain/remove	15.6	10.5	Major deadwood present
	570	*Pinus radiata - Monterey Pine*	22	2.513274123	14	Good	Good	M	Pest Plant (Weed)			9.6	6.4	
	571	*Eucalyptus albens - White Box*	18	2.984513021	23	Good	Good	M	Regulated Tree	Medium	Retain	11.4	8.1	Major deadwood present
	572	*Eucalyptus sp. - Gum Tree*	20.5	2.199114858	12	Good	Fair	M	Regulated Tree	Medium	Retain	8.4	5.6	
	573	*Eucalyptus sideroxylon - Red*		2.199114858		Good	Fair	M	Regulated Tree	Medium	Retain/remove	8.4	5.6	Included junctions
	574	*Tree is missing*	11.5		10							0.0	0.0	

Group Number	Tree Number	Species	Height Range (above 6m)	Trunk Circum. (m)	Canopy Spread (m)	Health	Structure	Stage	Tree Protection Status	Tree Quality Classification	Arboricultural Recommendation	TPZ AS 4970	D10*	Comments/summary
575		*Tree is dead*	20.2	2.042035225	9						Remove refer to comments	7.8	5.6	Dead Pinus species
	576	*Quercus palustris - Pin Oak*	22.5	1.884955592	12	Good	Good	M	Regulated Tree	Medium	Retain as a group	7.2	4.8	
		Quercus palustris - Pin Oak	20.2	2.042035225	8	Poor	Good	M	Regulated Tree	Poor	Retain as a group	7.8	5.6	
578		*Pinus radiata - Monterey Pine*	23	1.727875959	5	Good	Good	M	Pest Plant (Weed)	Medium		6.6	4.8	
579		*Pinus radiata - Monterey Pine*	22.2	1.570796327	4.5	Good	Good	M	Pest Plant (Weed)	Medium		6.0	4.0	
580		*Pinus radiata - Monterey Pine*	23	1.727875959	4.5	Good	Good	M	Pest Plant (Weed)	Medium		6.6	4.8	
581		*Araucaria bidwillii*	19	3.141592654	10	Good	Good	V	Regulated Tree	High	Retain	12.0	8.1	
582		*Arbutus unedo - Strawberry*	4	1.570796327	8			Not Regulated		Medium	Retain	6.0	4.0	Multi leaders
583		*Prunus sp. - Flowering Plum*	7	1.256637061	7	Fair	Fair	M	Not Regulated	Low	Retain	4.8	3.2	Heritage listed tree
584		*Photinia Glabra 'Robust*	3	0.471238898	6	Good	Fair	M	Not Regulated	Low	Retain/remove	1.8	1.6	
585		*Eucalyptus globulus*	25	2.827433388	11.5	Fair	Poor	EM	Regulated Tree	Medium	Retain	10.8	7.2	Hollows throughout habitat tree Heritage listed tree
586			13.2	0.628318531	4							2.4	1.6	
587			17.7	0.942477796	4							3.6	2.4	
588			20	1.413716694	11							5.4	4.0	
	589	*Eucalyptus sp. - Gum Tree*	15	1.413716694	7.5							5.4	4.0	No tree group present at recorded location
590		*Eucalyptus sp. - Gum Tree*	22.5	1.413716694	8							5.4	4.0	
591		*Eucalyptus sp. - Gum Tree*	9.2	0.785398163	4							3.0	2.4	
592		*Eucalyptus sp. - Gum Tree*	16.5	0.942477796	8							3.6	2.4	
593		*Eucalyptus sp. - Gum Tree*	14.7	0.942477796	8							3.6	2.4	
594		*Eucalyptus sp. - Gum Tree*	7.7	0.314159265	1.5							1.2	0.8	
Group	595	*Eucalyptus sp. - Gum Tree*	14.5	2.199114858	11.5							8.4	5.6	
17	596	*Eucalyptus sp. - Gum Tree*	6	0.314159265	2.5							1.2	0.8	
597		*Eucalyptus saligna*	19	1.256637061	10		EM		Regulated Tree	High	Retain as a group	4.8	3.2	
598		*Eucalyptus saligna*	21	1.570796327	10		EM		Regulated Tree	High	Retain as a group	6.0	4.0	
599		*Eucalyptus sp. - Gum Tree*	5.7	0.314159265	3							1.2	0.8	
600		*Eucalyptus sp. - Gum Tree*	4	0.314159265	3							1.2	0.8	
	601	*Pinus radiata - Monterey Pine*	13.2	2.513274123	8			Pest Plant (Weed)		Tree removed		9.6	6.4	
		Pinus radiata - Monterey Pine	15	1.570796327	7			Pest Plant (Weed)		Tree removed		6.0	4.0	
603		*Pinus radiata - Monterey Pine*	15.5	2.827433388	10			Pest Plant (Weed)		Tree removed		10.8	7.2	

Group Number	Tree Number	Species	Height Range (above 6m)	Trunk Circum. (m)	Canopy Spread (m)	Health	Structure	Stage	Tree Protection Status	Tree Quality Classification	Arboricultural Recommendation	TPZ AS 4970	D10*	Comments/summary
	604	*Pinus radiata - Monterey Pine*	15.5	1.256637061	8				Pest Plant (Weed)	Tree removed		4.8	3.2	
	605	*Pinus radiata - Monterey Pine*	15.7	1.570796327	7				Pest Plant (Weed)	Tree removed		6.0	4.0	
	606	*Pinus radiata - Monterey Pine*	16.2	1.570796327	11				Pest Plant (Weed)	Tree removed		6.0	4.0	
	607	*Pinus radiata - Monterey Pine*	14.7	0.628318531	4				Pest Plant (Weed)	Tree removed		2.4	1.6	
	608	*Pinus radiata - Monterey Pine*	16.5	1.884955592	11.5				Pest Plant (Weed)	Tree removed		7.2	4.8	
	609	*Pinus species*	11.7	1.256637061	4.5				Not Regulated			4.8	3.2	No tree group present at recorded location
	610	*Pinus species*	11.5	1.570796327	9.5				Not Regulated			6.0	4.0	
	611	*Pinus species*	11.7	1.884955592	10				Not Regulated			7.2	4.8	
	612	*Pinus species*	4.5	0.314159265	3				Regulated Tree			1.2	0.8	
	613	*Pinus species*	12	2.513274123	8				Not Regulated			9.6	6.4	
	614	*Pinus species*	11.7	1.256637061	4.5				Not Regulated			4.8	3.2	
	615	*Pinus species*	11.5	0.942477796	4				Not Regulated			3.6	2.4	
	616	*Pinus species*	9.2	0.942477796	4.5				Not Regulated			3.6	2.4	
	617	*Pinus species*	12	1.256637061	5				Not Regulated			4.8	3.2	
Group 17	618	*Pinus species*	11.7	0.628318531	3.5				Not Regulated			2.4	1.6	
	619	*Pinus species*	11.2	0.628318531	3.5				Not Regulated			2.4	1.6	
	620	*Pinus species*	11.2	0.628318531	3				Not Regulated			2.4	1.6	
	621	*Pinus species*	10.5	0.628318531	3.5				Regulated Tree			2.4	1.6	
	622	*Pinus species*	9	0.628318531	3				Regulated Tree			2.4	1.6	
	623	*Pinus species*	9	0.628318531	3.5				Regulated Tree			2.4	1.6	
	624	*Pinus species*	9.2	0.785398163	4				Regulated Tree			3.0	2.4	
	625	*Pinus species*	11.2	0.628318531	4				Regulated Tree			2.4	1.6	
	626	*Pinus species*	11.7	0.628318531	3.5				Regulated Tree			2.4	1.6	
	627	*Pinus species*	11.5	0.628318531	5				Regulated Tree			2.4	1.6	

Group Number	Tree Number	Species	Height Range (above 6m)	Trunk Circum. (m)	Canopy Spread (m)	Health	Structure	Stage	Tree Protection Status	Tree Quality Classification	Arboricultural Recommendation	TPZ AS 4970	D10*	Comments/summary
	628	*Pinus species*	11.7	1.099557429	4.5				Regulated Tree			4.2	3.2	
Group 12	629	*Pinus radiata - Monterey Pine*	21.2	1.884955592	10				Pest Plant (Weed)	Tree removed		7.2	4.8	
	630	*Pinus radiata - Monterey Pine*	21	1.884955592	5				Pest Plant (Weed)	Tree removed		7.2	4.8	
	631	*Pinus radiata - Monterey Pine*	20.5	1.570796327	9				Pest Plant (Weed)	Tree removed		6.0	4.0	
Group 17	632	*Pinus species*	15.2	1.256637061	9					Tree removed		4.8	3.2	No tree group present at recorded location
	633	*Pinus species*	11.5	1.570796327	8					Tree removed		6.0	4.0	
	634	*Pinus species*	12	1.727875959	8					Tree removed		6.6	4.8	
Group 16	635	*Eucalyptus sp. - Gum Tree*	5.2	0.785398163	7							3.0	2.4	POOR QUALITY GROUP
	636	*Eucalyptus sp. - Gum Tree*	4	0.314159265	2.5							1.2	0.8	
	637	*Eucalyptus sp. - Gum Tree*	16	1.256637061	10							4.8	3.2	
Group 12	638	*Pinus radiata - Monterey Pine*	15.2	1.256637061	8				Pest Plant (Weed)			4.8	3.2	
	639	*Pinus radiata - Monterey Pine*	13.5	0.628318531	3				Pest Plant (Weed)			2.4	1.6	
	640	*Pinus radiata - Monterey Pine*	14	0.628318531	4				Pest Plant (Weed)			2.4	1.6	
	641	*Pinus radiata - Monterey Pine*	13	0.628318531	5				Pest Plant (Weed)			2.4	1.6	
	642	*Pinus radiata - Monterey Pine*	15.2	1.570796327	10				Pest Plant (Weed)			6.0	4.0	
	643	*Pinus radiata - Monterey Pine*	11	0.471238898	2.5				Pest Plant (Weed)			1.8	1.6	
	644	*Pinus radiata - Monterey Pine*	7.5	0.471238898	4				Pest Plant (Weed)	Tree removed		1.8	1.6	
	645	*Pinus radiata - Monterey Pine*	14.2	1.884955592	10				Pest Plant (Weed)			7.2	4.8	
	646	*Pinus radiata - Monterey Pine*	14.7	1.884955592	13				Pest Plant (Weed)			7.2	4.8	
Group 22	647	*Pinus pinea - Stone Pine*	17	2.984513021	20				Regulated Tree	Exceptional	Retain as a group	11.4	8.1	EXCEPTIONAL Quality Group
	648	*Tree is missing*		1.884955592								7.2	4.8	
	649	*Pinus pinea - Stone Pine*	17	1.755	12	Very Good	Very Good	V	Regulated Tree	Exceptional	Retain as a group	6.7	4.8	
	650	*Quercus suber*	7	1.256637061	7.5				Not Regulated	Medium	Retain	4.8	3.2	Next to powerlines
	651	*Quercus suber*	4	0.471238898	3				Not Regulated	Poor	Retain	1.8	1.6	
	652	*Quercus robur - English Oak*	14	1.884955592	10							7.2	4.8	
Group 13	653	*Coryimbiamaculata*	18.2	0.628318531	3							2.4	1.6	POOR QUALITY GROUPofdensely planted trees, mostly Corymbiamaculata , some Eucaylptussaligna and possibly
	654	*Coryimbiamaculata*	13.5	0.628318531	4							2.4	1.6	
	655	*Coryimbiamaculata*	18.5	0.314159265	4							1.2	0.8	
	656	*Coryimbiamaculata*	18	2.199114858	9							8.4	5.6	
	657	*Coryimbiamaculata*	18.2	1.256637061	7							4.8	3.2	

Group Number	Tree Number	Species	Height Range (above 6m)	Trunk Circum. (m)	Canopy Spread (m)	Health	Structure	Stage	Tree Protection Status	Tree Quality Classification	Arboricultural Recommendation	TPZ AS 4970	D10*	Comments/summary
	658	*Coryimbiamaculata*	9	0.628318531	3.5							2.4	1.6	Eucalyptus maidenii. Understorey of weed species .
	659	*Coryimbiamaculata*	18.2	0.785398163	3							3.0	2.4	
	660	*Coryimbiamaculata*	7.5	0.471238898	2							1.8	1.6	
	661	*Coryimbiamaculata*		0.628318531								2.4	1.6	
	662	*Coryimbiamaculata*	14		3.5							0.0	0.0	
	663	*Coryimbiamaculata*	5	0.471238898	3							1.8	1.6	
	664	*Coryimbiamaculata*		0.471238898								1.8	1.6	
	665	*Coryimbiamaculata*	10.2		3.5							0.0	0.0	
	666	*Coryimbiamaculata*		0.628318531								2.4	1.6	
	667	*Coryimbiamaculata*	10.2		3.5							0.0	0.0	
	668	*Coryimbiamaculata*	5.2	0.314159265	2.5							1.2	0.8	
	669	*Coryimbiamaculata*	5	0.314159265	2.5							1.2	0.8	
	670	*Coryimbiamaculata*	6	1.099557429	6							4.2	3.2	
	671	*Coryimbiamaculata*	19	0.942477796	4							3.6	2.4	
	672	*Coryimbiamaculata*	6.2	0.314159265	3							1.2	0.8	
	673	*Coryimbiamaculata*	6.5	0.314159265	3							1.2	0.8	
	674	*Coryimbiamaculata*	3.2	0.314159265	4							1.2	0.8	
	675	*Coryimbiamaculata*	6	0.314159265	2.5							1.2	0.8	
	676	*Coryimbiamaculata*	6.2	0.314159265	2.5							1.2	0.8	
	677	*Coryimbiamaculata*	14.7	0.628318531	4							2.4	1.6	
	678	*Coryimbiamaculata*	11	0.314159265	2.5							1.2	0.8	
	679	*Coryimbiamaculata*	10	0.314159265	2.5							1.2	0.8	
	680	*Coryimbiamaculata*	20	1.256637061	7							4.8	3.2	
	681	*Coryimbiamaculata*	16	1.099557429	5							4.2	3.2	
	682	*Coryimbiamaculata*	17.2	1.570796327	13							6.0	4.0	
	683	*Coryimbiamaculata*	9	1.099557429	8							4.2	3.2	
	684	*Coryimbiamaculata*	19.2	0.942477796	4							3.6	2.4	
	685	*Coryimbiamaculata*	9.7	0.314159265	3.5							1.2	0.8	
	686	*Coryimbiamaculata*	20	0.942477796	7							3.6	2.4	
	687	*Coryimbiamaculata*	17.2	0.471238898	3							1.8	1.6	
	688	*Coryimbiamaculata*	8.5	0.628318531	4							2.4	1.6	
	689	*Coryimbiamaculata*	18.5	0.471238898	2.5							1.8	1.6	
	690	*Coryimbiamaculata*	7.7	0.314159265	2.5							1.2	0.8	
	691	*Coryimbiamaculata*	8	0.314159265	2							1.2	0.8	
	692	*Pinus species*	20.5	1.099557429	7.5				Not Regulated		Retain/remove	4.2	3.2	No tree group present at recorded location
Group 17	693	*Pinus species*	11.2	0.942477796	5				Not Regulated			3.6	2.4	
	694	*Pinus species*	12.2	0.942477796	4				Not Regulated			3.6	2.4	
	695	*Pinus species*	12	0.942477796	4				Not Regulated			3.6	2.4	

Group Number	Tree Number	Species	Height Range (above 6m)	Trunk Circum. (m)	Canopy Spread (m)	Health	Structure	Stage	Tree Protection Status	Tree Quality Classification	Arboricultural Recommendation	TPZ AS 4970	D10*	Comments/summary
696		*Pinus species*	11.2	0.628318531	4			Not Regulated				2.4	1.6	
697		*Pinus species*	10.5	0.628318531	3			Not Regulated				2.4	1.6	
698		*Pinus species*	7.5	0.628318531	4			Not Regulated				2.4	1.6	
699		*Pinus species*	8.5	0.628318531	2.5			Not Regulated				2.4	1.6	
700		*Pinus species*	4.2	0.628318531	1.5			Not Regulated				2.4	1.6	
701		*Pinus species*	8.2	0.628318531	3.5			Not Regulated				2.4	1.6	
702		*Pinus species*	11	0.785398163	4			Not Regulated				3.0	2.4	
703		*Pinus species*	11	0.785398163	5			Not Regulated				3.0	2.4	
704		*Pinus species*	11.5	0.785398163	5			Not Regulated				3.0	2.4	
705		*Pinus species*	8.5	0.471238898	4			Not Regulated				1.8	1.6	
706		*Pinus species*	12	0.628318531	5			Not Regulated				2.4	1.6	
707		*Pinus species*	10.2	0.471238898	4			Not Regulated				1.8	1.6	
708		*Pinus species*	9.2	0.628318531	4			Not Regulated				2.4	1.6	
709		*Pinus species*	10.5	0.471238898	3			Not Regulated				1.8	1.6	
710		*Pinus species*	10.5	0.785398163	5			Not Regulated				3.0	2.4	
711		*Pinus species*	10.5	0.628318531	4.5			Not Regulated				2.4	1.6	
712		*Pinus radiata - Monterey Pine*	17.7	1.570796327	8			Pest Plant (Weed)		Tree removed		6.0	4.0	
713		*Pinus radiata - Monterey Pine*	18.5	1.570796327	7.5			Pest Plant (Weed)		Tree removed		6.0	4.0	
714		*Pinus radiata - Monterey Pine*	18.5	1.570796327	8			Pest Plant (Weed)		Tree removed		6.0	4.0	
	715	*Quercus robur - English Oak*	19.5	1.413716694	6.5							5.4	4.0	MEDIUM QUALITY GROUP
716		*Quercus robur - English Oak*	5.5	0.314159265	4							1.2	0.8	
717		*Quercus robur - English Oak*	16.5	0.785398163	3							3.0	2.4	
Group	718	*Quercus robur - English Oak*	0.628318531									2.4	1.6	
14	719	*Quercus robur - English Oak*	14.7		2.5							0.0	0.0	
720		*Quercus robur - English Oak*	18	1.570796327	16							6.0	4.0	
721		*Quercus robur - English Oak*	0.942477796									3.6	2.4	
722		*Quercus robur - English Oak*	10		8							0.0	0.0	
723		*Pinus species*	21	3.141592654	14	Fair	Very Poor	EM	Tree removed			12.0	8.1	

Group Number	Tree Number	Species	Height Range (above 6m)	Trunk Circum. (m)	Canopy Spread (m)	Health	Structure	Stage	Tree Protection Status	Tree Quality Classification	Arboricultural Recommendation	TPZ AS 4970	D10*	Comments/summary
	724	*Pinus species*	14	0.471238898	3					Tree removed		1.8	1.6	POOR QUALITY GROUP. Very poor quality structure mostly twin leaders
	725	*Pinus species*	13.7	0.471238898	2.5					Tree removed		1.8	1.6	
	726	*Pinus species*	16.7	0.942477796	4					Tree removed		3.6	2.4	
	727	*Pinus species*	17	1.256637061	5					Tree removed		4.8	3.2	
	728	*Pinus species*	16.2	1.099557429	5					Tree removed		4.2	3.2	
	729	*Pinus species*	13.5	0.471238898	1.3					Tree removed		1.8	1.6	
	730	*Pinus species*	13	0.471238898	3.5					Tree removed		1.8	1.6	
Group	731	*Pinus species*	14.5	0.942477796	4					Tree removed		3.6	2.4	
	732	*Pinus species*	14.7	0.471238898	2.5					Tree removed		1.8	1.6	
	733	*Pinus species*	10.5	0.471238898	1.5					Tree removed		1.8	1.6	
	734	*Pinus species*	15.5	0.628318531	2.5					Tree removed		2.4	1.6	
	735	*Pinus species*	14.7	0.942477796	6					Tree removed		3.6	2.4	
	736	*Pinus species*	12.5	0.471238898	1.5					Tree removed		1.8	1.6	
	737	*Pinus species*	13.2	0.628318531	2.5					Tree removed		2.4	1.6	
	738	*Pinus species*	13	0.471238898	3	Fair	Very Poor	EM		Tree removed		1.8	1.6	
	739	*Pinus species*	21.5	1.570796327	5.5			EM	Pest Plant (Weed)	Tree removed		6.0	4.0	LOW QUALITY GROUP - mostly Pinus radiata (Weed species) and Acacia bailyana, contoneaster, crategagious (weed) and some kurrajongs. Not a high quality group.
	740	*Pinus species*	16.7	1.256637061	5.5					Tree removed		4.8	3.2	
	741	*Pinus species*	16	1.256637061	6					Tree removed		4.8	3.2	
	742	*Pinus species*		1.570796327						Tree removed		6.0	4.0	
	743	*Pinus species*	15		7					Tree removed		0.0	0.0	
	744	*Pinus species*	21	2.199114858	10					Tree removed		8.4	5.6	
	745	*Pinus species*	6.2	0.314159265	5							1.2	0.8	
	746	*Coryimbiamaculata*	6	0.188495559	2.5							0.7	0.8	
	747	*Pinus species*	6	0.314159265	4							1.2	0.8	
	748	*Pinus species*	5.5	0.376991118	4.5							1.4	0.8	
	749	*Pinus species*	5.2	0.314159265	3.5							1.2	0.8	
Group 12	750	*Pinus species*	5	0.471238898	3							1.8	1.6	
	751	*Pinus species*	21	3.141592654	12							12.0	8.1	
	752	*Pinus species*	6	0.376991118	3							1.4	0.8	
	753	*Pinus species*	7	0.471238898	2.5							1.8	1.6	
	754	*Pinus species*	7.5	0.471238898	3							1.8	1.6	
	755	*Pinus species*		1.570796327								6.0	4.0	
	756	*Pinus species*	17		5							0.0	0.0	
	757	*Pinus species*	20	2.827433388	15							10.8	7.2	
	758	*Pinus species*	20	1.413716694	5							5.4	4.0	
	759	*Pinus species*	21	2.199114858	9							8.4	5.6	
	760	*Pinus species*	20	2.042035225	8							7.8	5.6	
	761	*Pinus species*	20	2.35619449	13							9.0	6.4	
	762	*Pinus species*	14	1.727875959	6							6.6	4.8	
	763	*Pinus species*	14.5	0.942477796	5							3.6	2.4	

15

Group Number	Tree Number	Species	Height Range (above 6m)	Trunk Circum. (m)	Canopy Spread (m)	Health	Structure	Stage	Tree Protection Status	Tree Quality Classification	Arboricultural Recommendation	TPZ AS 4970	D10*	Comments/summary
764		*Pinus species*	6.5	0.471238898	2.5							1.8	1.6	
765		*Pinus species*	12	0.471238898	2.5							1.8	1.6	
766		*Pinus species*	17	0.785398163	3.5							3.0	2.4	
767		*Pinus species*	19	0.628318531	3.5							2.4	1.6	
768		*Pinus species*	5.5	0.157079633	3							0.6	0.8	
769		*Pinus radiata - Monterey Pine*	5	0.157079633	2.5			Pest Plant (Weed)				0.6	0.8	
770		*Pinus radiata - Monterey Pine*	1.099557429					Pest Plant (Weed)				4.2	3.2	
771		*Pinus radiata - Monterey Pine*	17	4				Pest Plant (Weed)				0.0	0.0	
	772	*Quercus robur - English Oak*	5.5	0.314159265	4							1.2	0.8	MEDIUM QUALITY GROUP
773		*Quercus robur - English Oak*	14.7	1.570796327	12							6.0	4.0	
774		*Quercus robur - English Oak*	13.5	0.785398163	4.5							3.0	2.4	
Group	775	*Quercus robur - English Oak*	14.5	1.413716694	15							5.4	4.0	
14	776	*Quercus robur - English Oak*	1.570796327									6.0	4.0	
777		*Quercus robur - English Oak*	14.7		12							0.0	0.0	
778		*Quercus robur - English Oak*	15.2	1.099557429	7							4.2	3.2	
779		*Quercus robur - English Oak*	13.7	1.413716694	11							5.4	4.0	
	780	*Coryimbiamaculata*	19.2	0.785398163	3.5							3.0	2.4	POOR QUALITY GROUP of densley planted trees, mostly Corymbiamaculata , some Eucalyptus saligna and possibly Eucalyptus maidenii. Understorey of weed species .
781		*Coryimbiamaculata*	20.5	1.413716694	4							5.4	4.0	
782		*Coryimbiamaculata*	23	0.942477796	3.5							3.6	2.4	
783		*Coryimbiamaculata*	21	0.942477796	2							3.6	2.4	
784		*Coryimbiamaculata*	22.7	1.256637061	4							4.8	3.2	
Group	785	*Coryimbiamaculata*	24	0.942477796	5.5							3.6	2.4	
13	786	*Coryimbiamaculata*	20.5	1.099557429	5							4.2	3.2	
787		*Coryimbiamaculata*	9.5	0.314159265	2.5							1.2	0.8	
788		*Coryimbiamaculata*	22.2	1.256637061	3							4.8	3.2	
789		*Coryimbiamaculata*	8.7	0.471238898	4							1.8	1.6	
790		*Coryimbiamaculata*	10.2	0.314159265	3							1.2	0.8	
791		*Coryimbiamaculata*	21.2	0.942477796	2.5							3.6	2.4	
792		*Tree is missing*	2.827433388									10.8	7.2	
	793	*Pinus pinea - Stone Pine*	16	13		Good	Good	Regulated Tree		Exceptional	Retain as a group	0.0	0.0	Exceptional Quality Group
		Pinus pinea - Stone Pine	1.570796327		10			Regulated Tree		Exceptional	Retain as a group	6.0	4.0	
795		*Pinus pinea - Stone Pine*	1.884955592		12			Regulated Tree		Exceptional	Retain as a group	7.2	4.8	
796		*Fraxinus oxycarpa - Desert*	12.5	2.042035225	12	Good	Good	M	Regulated Tree	Medium	Retain	7.8	5.6	Next to powerlines
797		*Pinus species*	6	0.785398163	5.5			Not Regulated				3.0	2.4	
Group	798	*Corymbiamaculata*	15.2	0.471238898	2.5							1.8	1.6	POOR QUALITY GROUP of densley planted trees, mostly
13	799	*Corymbiamaculata*	14	0.471238898	2							1.8	1.6	

Group Number	Tree Number	Species	Height Range (above 6m)	Trunk Circum. (m)	Canopy Spread (m)	Health	Structure	Stage	Tree Protection Status	Tree Quality Classification	Arboricultural Recommendation	TPZ AS 4970	D10*	Comments/summary
	800	*Corymbiamaculata*	14	0.408407045	2.5							1.6	0.8	Corymbiamaculata , some Eucaylptussaligna and possibly Eucalyptus maidenii. Understorey of weed species .
	801	*Corymbiamaculata*	9.5	0.251327412	1							1.0	0.8	
	802	*Corymbiamaculata*	5.5	0.188495559	1.5							0.7	0.8	
	803	*Corymbiamaculata*	13.7	0.408407045	2.5							1.6	0.8	
	804	*Corymbiamaculata*	9.7	0.314159265	2							1.2	0.8	
	805	*Corymbiamaculata*	12.2	0.314159265	2							1.2	0.8	
	806	*Corymbiamaculata*	13.5	0.408407045	2							1.6	0.8	
	807	*Corymbiamaculata*		0.314159265	1.5							1.2	0.8	
	808	*Corymbiamaculata*	5.2	0.251327412	1							1.0	0.8	
	809	*Corymbiamaculata*	8	0.251327412	2							1.0	0.8	
	810	*Corymbiamaculata*	9.7	0.251327412	2							1.0	0.8	
	811	*Corymbiamaculata*	9.7	0.251327412	1							1.0	0.8	
	812	*Corymbiamaculata*	12	0.628318531	4							2.4	1.6	
	813	*Corymbiamaculata*	18	0.942477796	4							3.6	2.4	
	814	*Corymbiamaculata*		0.314159265								1.2	0.8	
	815	*Corymbiamaculata*	11.7		2							0.0	0.0	
	816	*Corymbiamaculata*	15	0.471238898	2.5							1.8	1.6	
	817	*Corymbiamaculata*	12.2	0.408407045	1.5							1.6	0.8	
	818	*Corymbiamaculata*	17	0.471238898	1.5							1.8	1.6	
	819	*Corymbiamaculata*	18	0.628318531	4							2.4	1.6	
	820	*Corymbiamaculata*	16.5	0.471238898	3							1.8	1.6	
	821	*Corymbiamaculata*	18.2	0.785398163	4							3.0	2.4	
	822	*Corymbiamaculata*	17.7	0.471238898	2.5							1.8	1.6	
	823	*Corymbiamaculata*	18	0.628318531	3							2.4	1.6	
	824	*Corymbiamaculata*	16.5	0.628318531	4							2.4	1.6	
	825	*Corymbiamaculata*	16	0.628318531	2							2.4	1.6	
	826	*Corymbiamaculata*	16.7	0.628318531	3							2.4	1.6	
	827	*Corymbiamaculata*	16.5	0.628318531	2							2.4	1.6	
	828	*Corymbiamaculata*	17	0.471238898	1.5							1.8	1.6	
	829	*Corymbiamaculata*	17	0.471238898	2.5							1.8	1.6	
	830	*Corymbiamaculata*	17	0.471238898	2.5							1.8	1.6	
	831	*Corymbiamaculata*	17	0.471238898	1.5							1.8	1.6	
	832	*Corymbiamaculata*	17	0.785398163	3							3.0	2.4	
	833	*Corymbiamaculata*		0.471238898								1.8	1.6	
	834	*Corymbiamaculata*	15.5		3							0.0	0.0	
	835	*Corymbiamaculata*	17.2	0.471238898	2							1.8	1.6	
	836	*Corymbiamaculata*	17	0.471238898	1.5							1.8	1.6	
	837	*Corymbiamaculata*	17.2	0.628318531	2							2.4	1.6	
	838	*Corymbiamaculata*	15.5	0.471238898	1.5							1.8	1.6	
	839	*Corymbiamaculata*	16	0.471238898	3							1.8	1.6	
	840	*Corymbiamaculata*	16.2	0.471238898	2							1.8	1.6	

PAUL BANGAY
THE STUDIO
54 GWYNNE STREET CREMORNE
VIC 3121 AUSTRALIA | T +61 3 9070 6050
PRB DESIGN PTY LTD | ABN 20 066 291 076
PAULBANGAY.COM

ISSUE DATE 6th May 2026
PROJECT STATUS CONCEPT DESIGN
SCALE 1:500 @ A0 PAGE 6 of 18
ARCHITECT STEWART ARCHITECTURE
LANDSCAPE ARCHITECT EH CHECKED BY PB
CLIENT BLOC
PROJECT FORESTRY PLACE, YARRALUMLA ACT
SITE INSPECTED 23/03/2026
SITE AREA/ LEVEL JOB NO. 260225
SHEET NO. L007 ISSUE A

LANDSCAPE MANAGEMENT AND PROTECTION PLAN (3)
DRAWING TITLE:

[NOT FOR CONSTRUCTION]

VERIFY ALL DIMENSIONS ON SITE PRIOR TO COMMENCEMENT OF WORKS/ ORDERING. DO NOT SCALE FROM REPRODUCED/ COPIED DRAWINGS, USE ORIGINAL PLOT ONLY. CONTRACTOR AND CLIENT TO OBTAIN ALL PERMITS/ APPROVALS. STRUCTURAL ELEMENTS DETAILED BY PRB DESIGN FOR AESTHETIC REFERENCE ONLY. CHECK ALL DRAWINGS, QUANTITIES AND MATERIALS; REPORT ANY DISCREPANCIES/ ERRORS TO PRB DESIGN.

Group Number	Tree Number	Species	Height Range (above 6m)	Trunk Circum. (m)	Canopy Spread (m)	Health	Structure	Stage	Tree Protection Status	Tree Quality Classification	Arboricultural Recommendation	TPZ AS 4970	D10*	Comments/summary
	841	*Corymbiamaculata*	17.5	0.785398163	3.5							3.0	2.4	
	842	*Corymbiamaculata*	12.5	0.471238898	2							1.8	1.6	
	843	*Corymbiamaculata*	13.5	0.471238898	3							1.8	1.6	
	844	*Corymbiamaculata*	18.5	0.471238898	2							1.8	1.6	
	845	*Corymbiamaculata*	16.5	0.471238898	2.5							1.8	1.6	
	846	*Corymbiamaculata*	16.2	0.471238898	2.5							1.8	1.6	
	847	*Corymbiamaculata*	19.7	0.471238898	2.5							1.8	1.6	
	848	*Corymbiamaculata*	14	0.471238898	2.5							1.8	1.6	
	849	*Corymbiamaculata*	18	0.628318531	2.5							2.4	1.6	
	850	*Corymbiamaculata*	20.2	0.785398163	2.5							3.0	2.4	
	851	*Corymbiamaculata*	19.7	0.785398163	3							3.0	2.4	
	852	*Corymbiamaculata*	19.2	0.628318531	3.5							2.4	1.6	
	853	*Corymbiamaculata*	17.5	0.785398163	3							3.0	2.4	
	854	*Corymbiamaculata*	18.2	0.471238898	3							1.8	1.6	
	855	*Corymbiamaculata*	15.7	0.628318531	1.5							2.4	1.6	
	856	*Corymbiamaculata*	14.7	0.628318531	3							2.4	1.6	
	857	*Corymbiamaculata*	15	0.471238898	2.5							1.8	1.6	
	858	*Corymbiamaculata*	14.5	0.314159265	1							1.2	0.8	
	859	*Corymbiamaculata*	16	0.471238898	2							1.8	1.6	
	860	*Corymbiamaculata*	20	0.785398163	2.5							3.0	2.4	
	861	*Corymbiamaculata*	15.2	0.628318531	4							2.4	1.6	
	862	*Corymbiamaculata*	13.2	0.471238898	3							1.8	1.6	
	863	*Corymbiamaculata*	17.5	0.628318531	2.5							2.4	1.6	
	864	*Corymbiamaculata*	20	0.785398163	2.5							3.0	2.4	
	865	*Corymbiamaculata*	18.5	0.628318531	2.5							2.4	1.6	
	866	*Corymbiamaculata*	16.7	0.628318531	2.5							2.4	1.6	
	867	*Corymbiamaculata*	7.5	0.157079633	1							0.6	0.8	
	868	*Corymbiamaculata*	14.7	0.471238898	2.5							1.8	1.6	
	869	*Corymbiamaculata*	15.2	0.314159265	1.5							1.2	0.8	
	870	*Corymbiamaculata*	15.5	0.785398163	5							3.0	2.4	
	871	*Corymbiamaculata*	17	0.785398163	3.5							3.0	2.4	
	872	*Corymbiamaculata*		0.471238898								1.8	1.6	
	873	*Corymbiamaculata*	8.5		3							0.0	0.0	
	874	*Corymbiamaculata*	17.5	0.628318531	2.5							2.4	1.6	
	875	*Corymbiamaculata*	12.5	0.314159265	2							1.2	0.8	
	876	*Corymbiamaculata*	20.5	0.628318531	3							2.4	1.6	
	877	*Corymbiamaculata*	18.5	0.628318531	3							2.4	1.6	
	878	*Corymbiamaculata*	19.2	0.628318531	1.5							2.4	1.6	
	879	*Corymbiamaculata*	17.2	0.628318531	3							2.4	1.6	
	880	*Corymbiamaculata*	13.5	0.471238898	2.5							1.8	1.6	
	881	*Corymbiamaculata*	17.5	0.628318531	4							2.4	1.6	

Group Number	Tree Number	Species	Height Range (above 6m)	Trunk Circum. (m)	Canopy Spread (m)	Health	Structure	Stage	Tree Protection Status	Tree Quality Classification	Arboricultural Recommendation	TPZ AS 4970	D10*	Comments/summary
	882	*Corymbiamaculata*	18.2	0.628318531	2.5							2.4	1.6	
	883	*Corymbiamaculata*	20.2	0.628318531	2							2.4	1.6	
	884	*Corymbiamaculata*	20	0.942477796	4							3.6	2.4	
	885	*Corymbiamaculata*	10	0.314159265	3							1.2	0.8	
	886	*Corymbiamaculata*	18	0.471238898	2							1.8	1.6	
	887	*Corymbiamaculata*	18.2	0.628318531	2.5							2.4	1.6	
	888	*Corymbiamaculata*	16.7	0.471238898	2.5							1.8	1.6	
	889	*Corymbiamaculata*	13.7	0.471238898	3							1.8	1.6	
	890	*Corymbiamaculata*	9.7	0.471238898	3							1.8	1.6	
12	891	*Pinus species*	23.7	1.884955592	8							7.2	4.8	POOR QUALITY GROUP - mostly Pinus radiata (Weed species) and Acacia bailyana, contoneaster, crategagious (weed) and some kurrajongs. Not a high quality group.
	892	*Pinus species*	6	0.628318531	4							2.4	1.6	
	893	*Pinus species*		1.727875959								6.6	4.8	
	894	*Pinus species*	25		4.5							0.0	0.0	
Group 13	895	*Corymbiamaculata*	7.5	0.942477796	4.5						Retain as a group	3.6	2.4	POOR QUALITY GROUP of densley planted trees, mostly Corymbiamaculata , some Eucalyptus saligna and possibly Eucalyptus maidenii. Understorey of weed species .
	896	*Corymbiamaculata*	10.2	0.942477796	4.5						Retain as a group	3.6	2.4	
	897	*Corymbiamaculata*	9.5	0.628318531	5						Retain as a group	2.4	1.6	
	898	*Corymbiamaculata*	6.2	0.157079633	1						Retain as a group	0.6	0.8	
	899	*Eucalyptus saligna*	15.7	0.628318531	3	Good	Good	EM	Regulated Tree	Medium	Retain as a group	2.4	1.6	
	900	*Eucalyptus saligna*	17.7	0.942477796	8	Good	Good	EM	Regulated Tree	Medium	Retain as a group	3.6	2.4	
Group 13 A	901	*Pinus species*	5.5	0.471238898	3	Fair	Fair	EM	Regulated Tree	Poor	Retain/remove	1.8	1.6	POOR QUALITY GROUP Plantation of pinus species, very tightly planted. Retain as a group only or remove.
	902	*Pinus species*		0.314159265								1.2	0.8	
	903	*Pinus species*			2.5							0.0	0.0	
	904	*Pinus species*	9.2	0.628318531	3.5							2.4	1.6	
	905	*Pinus species*	8.2	0.471238898	2.5							1.8	1.6	
	906	*Pinus species*	5	0.314159265	2.5							1.2	0.8	
	907	*Pinus species*	8	0.314159265	2							1.2	0.8	
	908	*Pinus species*	11.7	0.314159265	2							1.2	0.8	
	909	*Pinus species*	7.7	0.785398163	4.5							3.0	2.4	
	910	*Pinus species*	3.5	0.314159265	1.5							1.2	0.8	
	911	*Pinus species*	6.5	0.471238898	3							1.8	1.6	
	912	*Pinus species*	12.2	0.785398163	4							3.0	2.4	
	913	*Pinus species*	5	0.314159265	2.5							1.2	0.8	
	914	*Pinus species*	9.7	0.471238898	3.5							1.8	1.6	
	915	*Pinus species*	5	0.314159265	2.5							1.2	0.8	
	916	*Pinus species*	4	0.314159265	2							1.2	0.8	
	917	*Pinus species*	5.5	0.314159265	3							1.2	0.8	
	918	*Pinus species*	9.2	0.785398163	3.5							3.0	2.4	
	919	*Pinus species*	7.7	0.785398163	4							3.0	2.4	

Group

Group Number	Tree Number	Species	Height Range (above 6m)	Trunk Circum. (m)	Canopy Spread (m)	Health	Structure	Stage	Tree Protection Status	Tree Quality Classification	Arboricultural Recommendation	TPZ AS 4970	D10*	Comments/summary
920		*Pinus species*	11.2	0.942477796	5							3.6	2.4	
921		*Pinus species*	0.785398163									3.0	2.4	
922		*Pinus species*	15.7		3.5							0.0	0.0	
923		*Pinus species*	6.7	0.785398163	4							3.0	2.4	
924		*Pinus species*	7	0.785398163	3							3.0	2.4	
925		*Pinus species*	4.5	0.314159265	3							1.2	0.8	
	926	*Corymbiamaculata*	5	0.314159265	2							1.2	0.8	POOR QUALITY GROUP of densley planted trees, mostly Corymbiamaculata , some Eucalyptus saligna and possibly Eucalyptus maidenii. Understorey of weed species .
927		*Corymbiamaculata*	5.5	0.314159265	3							1.2	0.8	
13	928	*Corymbiamaculata*	9	0.314159265	3							1.2	0.8	
929		*Eucalyptus elata - River Peppermint Gum*		1.570796327	8	Fair	Good	EM	Regulated Tree	Poor	Major Arboricultural work required refer	6.0	4.0	remove deadwood
930		*Eucalyptus elata - River Peppermint Gum*		1.884955592	9.5	Fair	Good	EM	Regulated Tree	Medium	Retain as a group	7.2	4.8	
931		*Eucalyptus elata - River Peppermint Gum*	18	1.570796327	8	Fair	Good	EM	Regulated Tree	Medium	Retain as a group	6.0	4.0	
932		*Eucalyptus elata - River Peppermint Gum*		1.570796327	8	Fair	Good	EM	Regulated Tree	Medium	Retain as a group	6.0	4.0	
933		*Eucalyptus elata - River Peppermint Gum*		1.570796327	7.5	Fair	Good	EM	Regulated Tree	Medium	Retain as a group	6.0	4.0	
	934	*Eucalyptus sp. - Gum Tree*	14.2	1.256637061	12							4.8	3.2	POOR QUALITY GROUP- Eucalyptus species with weed species under canopy
935		*Eucalyptus sp. - Gum Tree*	13.5	0.942477796	7							3.6	2.4	
936		*Eucalyptus sp. - Gum Tree*	5	0.471238898	3.5							1.8	1.6	
937		*Eucalyptus sp. - Gum Tree*	5.5	0.471238898	5							1.8	1.6	
938		*Eucalyptus sp. - Gum Tree*	8.5	0.628318531	6.5							2.4	1.6	
939		*Eucalyptus sp. - Gum Tree*	13.5	0.942477796	5							3.6	2.4	
940		*Eucalyptus sp. - Gum Tree*	13.5	1.256637061	7							4.8	3.2	
941		*Eucalyptus sp. - Gum Tree*	12.7	0.628318531	6							2.4	1.6	
942		*Eucalyptus sp. - Gum Tree*	5	0.628318531	5							2.4	1.6	
943		*Eucalyptus sp. - Gum Tree*	11	0.471238898	5							1.8	1.6	
Group 16	944	*Eucalyptus sp. - Gum Tree*	16	1.570796327	12							6.0	4.0	
945		*Eucalyptus sp. - Gum Tree*	16	0.785398163	4.5							3.0	2.4	
946		*Eucalyptus sp. - Gum Tree*	0.785398163									3.0	2.4	
947		*Eucalyptus sp. - Gum Tree*	14		7							0.0	0.0	
948		*Eucalyptus sp. - Gum Tree*	10	0.471238898	4							1.8	1.6	
949		*Eucalyptus sp. - Gum Tree*	0.471238898									1.8	1.6	
950		*Eucalyptus sp. - Gum Tree*	6.5		5							0.0	0.0	
951		*Eucalyptus sp. - Gum Tree*	12	0.628318531	6							2.4	1.6	
952		*Eucalyptus sp. - Gum Tree*	0.628318531									2.4	1.6	
953		*Eucalyptus sp. - Gum Tree*	6.7		5							0.0	0.0	
954		*Eucalyptus sp. - Gum Tree*	0.628318531		4							2.4	1.6	

Group

Group Number	Tree Number	Species	Height Range (above 6m)	Trunk Circum. (m)	Canopy Spread (m)	Health	Structure	Stage	Tree Protection Status	Tree Quality Classification	Arboricultural Recommendation	TPZ AS 4970	D10*	Comments/summary
Group 12	955	*Pinus radiata - Monterey Pine*		0.628318531					Pest Plant (Weed)			2.4	1.6	POOR QUALITY GROUP - mostly Pinus radiata (Weed species) and Acacia bailyana, contoneaster, crategagious (weed) and some kurrajongs. Not a high quality group.
	956	*Pinus radiata - Monterey Pine*	12		5				Pest Plant (Weed)			0.0	0.0	
	957	*Pinus radiata - Monterey Pine*		2.199114858					Pest Plant (Weed)			8.4	5.6	
	958	*Pinus radiata - Monterey Pine*	23		7				Pest Plant (Weed)			0.0	0.0	
	959	*Pinus radiata - Monterey Pine*	23	2.199114858	8				Pest Plant (Weed)			8.4	5.6	
	960	*Pinus radiata - Monterey Pine*		0.785398163	0.01				Pest Plant (Weed)			3.0	2.4	
	961	*Pinus radiata - Monterey Pine*	20		2				Pest Plant (Weed)			0.0	0.0	
	962	*Pinus radiata - Monterey Pine*	6	0.471238898	4				Pest Plant (Weed)			1.8	1.6	
	963	*Pinus radiata - Monterey Pine*	9.7	0.314159265	2				Pest Plant (Weed)			1.2	0.8	
	964	*Pinus radiata - Monterey Pine*	23	1.884955592	7				Pest Plant (Weed)			7.2	4.8	
	965	*Pinus radiata - Monterey Pine*	7.2	0.314159265	3				Pest Plant (Weed)			1.2	0.8	
	966	*Pinus radiata - Monterey Pine*	5.7	0.628318531	2.5				Pest Plant (Weed)			2.4	1.6	
	967	*Pinus radiata - Monterey Pine*	5.5	0.471238898	3				Pest Plant (Weed)			1.8	1.6	
	968	*Pinus radiata - Monterey Pine*	21	2.199114858	7				Pest Plant (Weed)			8.4	5.6	
	969	*Pinus radiata - Monterey Pine*	10.2	0.471238898	3.5				Pest Plant (Weed)			1.8	1.6	
	970	*Pinus radiata - Monterey Pine*	25	1.884955592	6				Pest Plant (Weed)			7.2	4.8	
	971	*Pinus radiata - Monterey Pine*	25	2.042035225	7				Pest Plant (Weed)			7.8	5.6	
	972	*Pinus radiata - Monterey Pine*	22	1.884955592	5.5				Pest Plant (Weed)			7.2	4.8	
	973	*Pinus radiata - Monterey Pine*	19	1.727875959	9				Pest Plant (Weed)			6.6	4.8	
	974	*Quercus robur - English Oak*	11.2	0.628318531	7	Fair	Good	EM	Regulated Tree	Medium	Ratain	2.4	1.6	
	975	*Eucalyptus dives - Broad Leaf*	15	1.256637061		Good	Poor	EM	Regulated Tree	Low	Retain/remove	4.8	3.2	
	976	*Tree is missing*	15		7.5							0.0	0.0	
	977	*Eucalyptus dives - Broad Leaf*	15.5	1.884955592	10	Good	Fair	EM	Regulated Tree	Medium	Retain/remove	7.2	4.8	Multi-stemmed from ground level
	978	*Eucalyptus dives - Broad Leaf*	14	1.884955592	6	Good	Poor	EM	Regulated Tree	Medium	Retain/remove	7.2	4.8	Stump regrowth

Group Number	Tree Number	Species	Height Range (above 6m)	Trunk Circum. (m)	Canopy Spread (m)	Health	Structure	Stage	Tree Protection Status	Tree Quality Classification	Arboricultural Recommendation	TPZ AS 4970	D10*	Comments/summary
979		*Eucalyptus sp. - Gum Tree*	19.5	1.256637061	4.5	Good	Good	EM	Regulated Tree	High		4.8	3.2	
980		*Eucalyptus sp. - Gum Tree*	19.5	1.570796327	5	Good	Good	EM	Regulated Tree	High	Retain	6.0	4.0	
981		*Eucalyptus sp. - Gum Tree*	18.7	0.942477796	4.5			Regulated Tree		High		3.6	2.4	
982		*Pinus radiata - Monterey Pine*	17	1.256637061	6			Pest Plant (Weed)				4.8	3.2	
983		*Sorbus domestica - Service*	13.2	0.628318531	5			Pest Plant (Weed)				2.4	1.6	
984		*Pinus radiata - Monterey Pine*	16.7	1.099557429	3.5			Pest Plant (Weed)				4.2	3.2	
985		*Pinus radiata - Monterey Pine*	5	0.314159265	3			Pest Plant (Weed)				1.2	0.8	
	986	*Pinus pinea - Stone Pine*	14.5	1.727875959	6.5			Regulated Tree		Medium	Retain/remove	6.6	4.8	LOW QUALITY GROUP - High-density planting. Deadwood is prevalent throughout the canopy. Numerous dead trees are present, with several exhibiting lean and partial root plate failure
		Pinus pinea - Stone Pine	13	1.570796327	4			Regulated Tree		Medium	Retain/remove	6.0	4.0	
988		*Pinus pinea - Stone Pine*	12	1.884955592	13			Regulated Tree		Medium	Retain/remove	7.2	4.8	
989		*Pinus pinea - Stone Pine*	13	1.256637061	7			Regulated Tree		Medium	Retain/remove	4.8	3.2	
990		*Pinus pinea - Stone Pine*	12.5	1.099557429	6			Regulated Tree		Medium	Retain/remove	4.2	3.2	
Group 18	991	*Pinus pinea - Stone Pine*	12.5	1.099557429	5			Regulated Tree		Medium	Retain/remove	4.2	3.2	
992		*Pinus pinea - Stone Pine*	13	1.256637061	6.5			Regulated Tree		Medium	Retain/remove	4.8	3.2	
993		*Pinus pinea - Stone Pine*	13	2.199114858	10			Regulated Tree		Medium	Retain/remove	8.4	5.6	
994		*Pinus pinea - Stone Pine*	12.5	1.256637061	8			Regulated Tree		Medium	Retain/remove	4.8	3.2	
995		*Pinus pinea - Stone Pine*	15	1.884955592	12			Regulated Tree		Medium	Retain/remove	7.2	4.8	
996		*Pinus pinea - Stone Pine*	18	2.199114858	14			Regulated Tree		Medium	Retain/remove	8.4	5.6	
997		5.5		0.628318531	5.5			Regulated Tree				2.4	1.6	
998		14		0.628318531	4.5			Regulated Tree				2.4	1.6	
	999	*Corymbiamaculata*	14	0.628318531	2.5			Regulated Tree				2.4	1.6	POOR QUALITY GROUP of densley planted trees, mostly Corymbiamaculata , some Eucaylptussaligna and possibly Eucalyptus maidenii. Understorey of weed species .
		Corymbiamaculata	16	0.471238898	3.5			Regulated Tree				1.8	1.6	
13	1001	*Corymbiamaculata*	16	0.628318531	4			Regulated Tree				2.4	1.6	
1002		*Corymbiamaculata*	0.942477796					Regulated Tree				3.6	2.4	

Group Number	Tree Number	Species	Height Range (above 6m)	Trunk Circum. (m)	Canopy Spread (m)	Health	Structure	Stage	Tree Protection Status	Tree Quality Classification	Arboricultural Recommendation	TPZ AS 4970	D10*	Comments/summary
	1003	*Corymbiamaculata*	21		6				Regulated Tree			0.0	0.0	
	1004	*Corymbiamaculata*		0.785398163					Regulated Tree			3.0	2.4	
	1005	*Corymbiamaculata*	17		6				Regulated Tree			0.0	0.0	
	1006	*Corymbiamaculata*	15	0.471238898	3				Regulated Tree			1.8	1.6	
	1007	*Corymbiamaculata*	8	0.314159265	2.5				Regulated Tree			1.2	0.8	
	1008	*Corymbiamaculata*	8	0.314159265	2				Regulated Tree			1.2	0.8	
	1009	*Corymbiamaculata*	12	0.628318531	2				Regulated Tree			2.4	1.6	
	1010	*Corymbiamaculata*	20	1.256637061	5				Regulated Tree			4.8	3.2	
	1011	*Corymbiamaculata*	16	0.628318531	2				Regulated Tree			2.4	1.6	
	1012	*Corymbiamaculata*	16	1.099557429	5				Regulated Tree			4.2	3.2	
	1013	*Corymbiamaculata*	8	0.251327412	1.5				Regulated Tree			1.0	0.8	
	1014	*Corymbiamaculata*	5	0.314159265	2				Regulated Tree			1.2	0.8	
	1015	*Corymbiamaculata*	6	0.471238898	3				Regulated Tree			1.8	1.6	
Group 12	1016	*Pinus radiata - Monterey Pine*	5	0.314159265	2				Pest Plant (Weed)			1.2	0.8	POOR QUALITY GROUP - mostly Pinus radiata (Weed species) and Acacia bailyana, contoneaster, crategagious (weed) and some kurrajongs. Not a high quality group.
	1017	*Pinus radiata - Monterey Pine*	5	0.628318531	5				Pest Plant (Weed)			2.4	1.6	
	1018	*Pinus radiata - Monterey Pine*		0.471238898					Pest Plant (Weed)			1.8	1.6	
	1019	*Pinus radiata - Monterey Pine*	8		5				Pest Plant (Weed)			0.0	0.0	
	1020	*Pinus radiata - Monterey Pine*	12	0.471238898	3				Pest Plant (Weed)			1.8	1.6	
	1021	*Pinus radiata - Monterey Pine*	17	0.628318531	3				Pest Plant (Weed)			2.4	1.6	
	1022	*Pinus radiata - Monterey Pine*	10	0.314159265	2				Pest Plant (Weed)			1.2	0.8	
	1023	*Pinus radiata - Monterey Pine*	16	0.942477796	6				Pest Plant (Weed)			3.6	2.4	
	1024	*Pinus radiata - Monterey Pine*		0.471238898					Pest Plant (Weed)			1.8	1.6	
	1025	*Pinus radiata - Monterey Pine*	10		5				Pest Plant (Weed)			0.0	0.0	
	1026	*Pinus radiata - Monterey Pine*	11	0.628318531	5				Pest Plant (Weed)			2.4	1.6	

Group Number	Tree Number	Species	Height Range (above 6m)	Trunk Circum. (m)	Canopy Spread (m)	Health	Structure	Stage	Tree Protection Status	Tree Quality Classification	Arboricultural Recommendation	TPZ AS 4970	D10*	Comments/summary
	1027	*Pinus radiata - Monterey Pine*		1.570796327					Pest Plant (Weed)			6.0	4.0	
	1028	*Pinus radiata - Monterey Pine*	25		5				Pest Plant (Weed)			0.0	0.0	
	1029	*Pinus radiata - Monterey Pine*	9	0.471238898	3				Pest Plant (Weed)			1.8	1.6	
	1030	*Pinus radiata - Monterey Pine*		1.884955592					Pest Plant (Weed)			7.2	4.8	
	1031	*Pinus radiata - Monterey Pine*	27		6				Pest Plant (Weed)			0.0	0.0	
	1032	*Pinus radiata - Monterey Pine*	12	0.471238898	4				Pest Plant (Weed)			1.8	1.6	
	1033	*Pinus radiata - Monterey Pine*	12	1.099557429	6				Pest Plant (Weed)			4.2	3.2	
	1034	*Pinus radiata - Monterey Pine*	12	0.628318531	4.5				Pest Plant (Weed)			2.4	1.6	
	1035	*Pinus radiata - Monterey Pine*	25	1.256637061	6				Pest Plant (Weed)			4.8	3.2	
	1036	*Pinus radiata - Monterey Pine*	26	1.256637061	4				Pest Plant (Weed)			4.8	3.2	
	1037	*Pinus radiata - Monterey Pine*	23	1.884955592	8				Pest Plant (Weed)			7.2	4.8	
	1038	*Pinus radiata - Monterey Pine*	21	1.570796327	5.5				Pest Plant (Weed)			6.0	4.0	
	1039	*Pinus radiata - Monterey Pine*	26	1.413716694	3				Pest Plant (Weed)			5.4	4.0	
	1040	*Pinus radiata - Monterey Pine*	6	0.314159265	1.5				Pest Plant (Weed)			1.2	0.8	
	1041	*Pinus radiata - Monterey Pine*	25	1.884955592	8				Pest Plant (Weed)			7.2	4.8	
	1042	*Pinus radiata - Monterey Pine*	27.5	2.199114858	7.5				Pest Plant (Weed)			8.4	5.6	
	1043	*Pinus radiata - Monterey Pine*	5	0.785398163	5				Pest Plant (Weed)			3.0	2.4	
	1044	*Pinus radiata - Monterey Pine*	5	0.471238898	2.5				Pest Plant (Weed)			1.8	1.6	
	1045	*Pinus radiata - Monterey Pine*	13.5	2.35619449	6				Pest Plant (Weed)			9.0	6.4	
	1046	*Pinus radiata - Monterey Pine*	5	0.785398163	3				Pest Plant (Weed)			3.0	2.4	
	1047	*Pinus radiata - Monterey Pine*	8.5	0.471238898	2.5				Pest Plant (Weed)			1.8	1.6	
	1048	*Pinus radiata - Monterey Pine*	8	0.314159265	3				Pest Plant (Weed)			1.2	0.8	
	1049	*Pinus radiata - Monterey Pine*	8	0.314159265	2				Pest Plant (Weed)			1.2	0.8	
	1050	*Pinus radiata - Monterey Pine*	8.5	0.314159265	2				Pest Plant (Weed)			1.2	0.8	

Group Number	Tree Number	Species	Height Range (above 6m)	Trunk Circum. (m)	Canopy Spread (m)	Health	Structure	Stage	Tree Protection Status	Tree Quality Classification	Arboricultural Recommendation	TPZ AS 4970	D10*	Comments/summary
	1051	*Pinus radiata - Monterey Pine*	20	0.785398163	4				Pest Plant (Weed)			3.0	2.4	
	1052	*Pinus radiata - Monterey Pine*	20	1.884955592	14				Pest Plant (Weed)			7.2	4.8	
	1053	*Eucalyptus sp. - Gum Tree*	20	0.942477796	4	Good	Fair	EM	Regulated Tree	Medium	Retain as a group	3.6	2.4	
	1054	*Eucalyptus sp. - Gum Tree*	21	1.256637061	5	Good	Fair	EM	Regulated Tree	Medium	Retain as a group	4.8	3.2	
Group 10	1055	*Pinus radiata - Monterey Pine*	20	0.942477796	3				Pest Plant (Weed)			3.6	2.4	
	1056	*Pinus radiata - Monterey Pine*	25	1.570796327	5.5				Pest Plant (Weed)			6.0	4.0	
	1057	*Pinus radiata - Monterey Pine*	25	2.199114858	6				Pest Plant (Weed)			8.4	5.6	
	1058	*Pinus radiata - Monterey Pine*	25	2.35619449	6				Pest Plant (Weed)			9.0	6.4	
	1059	*Pinus radiata - Monterey Pine*	10.5	0.471238898	3.5				Pest Plant (Weed)			1.8	1.6	
	1060	*Pinus radiata - Monterey Pine*		1.884955592					Pest Plant (Weed)			7.2	4.8	
	1061	*Pinus radiata - Monterey Pine*	17.5		9				Pest Plant (Weed)			0.0	0.0	
	1062	*Pinus radiata - Monterey Pine*	9.2	0.471238898	3				Pest Plant (Weed)			1.8	1.6	
	1063	*Pinus radiata - Monterey Pine*	7.5	0.471238898	2.5				Pest Plant (Weed)			1.8	1.6	
	1064	*Pinus radiata - Monterey Pine*	14.7	1.256637061	7				Pest Plant (Weed)			4.8	3.2	
	1065	*Pinus radiata - Monterey Pine*	12	0.314159265	2.5				Pest Plant (Weed)			1.2	0.8	
	1066	*Pinus radiata - Monterey Pine*	16.2	1.256637061	6				Pest Plant (Weed)			4.8	3.2	
	1067	*Pinus radiata - Monterey Pine*	18.2	1.256637061	5				Pest Plant (Weed)			4.8	3.2	
	1068	*Eucalyptus sp. - Gum Tree*	16.5	0.942477796	6				Regulated Tree			3.6	2.4	Tree Missing
	1069	*Eucalyptus sp. - Gum Tree*	22.5	1.570796327	7	Good	Fair	EM	Regulated Tree	Medium	Retain as a group	6.0	4.0	Hollow present at ~8 m AGL.
	1070	*Pinus radiata - Monterey Pine*	15.2	0.628318531	3				Pest Plant (Weed)			2.4	1.6	
	1071	*Pinus radiata - Monterey Pine*	15	0.785398163	3.5				Pest Plant (Weed)			3.0	2.4	
	1072	*Tree is dead*	17.7	1.099557429	4						Remove refer to comments	4.2	3.2	Dead
	1073	*Stump only*	6.5	0.314159265	5							1.2	0.8	
	1074	*Acacia baileyana - Cootamundra Wattle*	15	0.942477796	4.5				Pest Plant (Weed)			3.6	2.4	

Group Number	Tree Number	Species	Height Range (above 6m)	Trunk Circum. (m)	Canopy Spread (m)	Health	Structure	Stage	Tree Protection Status	Tree Quality Classification	Arboricultural Recommendation	TPZ AS 4970	D10*	Comments/summary
	1075	*Pinus radiata - Monterey Pine*	25.2	2.513274123	8.5				Pest Plant (Weed)			9.6	6.4	Drought affected deadwood present mature group of refer to
	1076	*Tree is dead*	22	2.513274123	9				Pest Plant (Weed)			9.6	6.4	Part of group of Pinus Radiata
	1077	*Pinus radiata - Monterey Pine*	25	2.199114858	7				Pest Plant (Weed)			8.4	5.6	
	1078	*Pinus radiata - Monterey Pine*	24.5	1.570796327	5				Pest Plant (Weed)			6.0	4.0	
	1079	*Pinus radiata - Monterey Pine*	26	2.513274123	7				Pest Plant (Weed)			9.6	6.4	
	1080	*Pinus radiata - Monterey Pine*	26.2	2.827433388	11				Pest Plant (Weed)			10.8	7.2	
	1081	*Pinus radiata - Monterey Pine*	10.2	0.628318531	3				Pest Plant (Weed)			2.4	1.6	
	1082	*Pinus radiata - Monterey Pine*	15	1.256637061	5				Pest Plant (Weed)			4.8	3.2	
Group	1083	*Pinus radiata - Monterey Pine*	31	2.827433388	9				Pest Plant (Weed)			10.8	7.2	
	1084	*Pinus radiata - Monterey Pine*	27.5	1.884955592	5				Pest Plant (Weed)			7.2	4.8	
	1085	*Pinus radiata - Monterey Pine*	23.5	1.727875959	6				Pest Plant (Weed)			6.6	4.8	
	1086	*Pinus radiata - Monterey Pine*	27	1.570796327	5.5				Pest Plant (Weed)			6.0	4.0	
	1087	*Pinus radiata - Monterey Pine*	14.7	1.884955592	8				Pest Plant (Weed)			7.2	4.8	
	1088	*Pinus radiata - Monterey Pine*	28.2	2.513274123	7				Pest Plant (Weed)			9.6	6.4	
	1089	*Pinus radiata - Monterey Pine*	24	1.884955592	7				Pest Plant (Weed)			7.2	4.8	
	1090	*Pinus radiata - Monterey Pine*	24	2.513274123	7.5				Pest Plant (Weed)			9.6	6.4	
	1091	*Pinus radiata - Monterey Pine*	25.5	2.199114858	7				Pest Plant (Weed)			8.4	5.6	
	1092	*Pinus radiata - Monterey Pine*	11.5	0.942477796	6				Pest Plant (Weed)			3.6	2.4	
	1093	*Malus sp. - Crab Apple*	5.7	0.471238898	5.5	Poor	Poor	M	Not Regulated	Poor	Retain/remove	1.8	1.6	
	1094	*Quercus robur - English Oak*	11.2	1.884955592	14	Good	Poor	M	Regulated Tree	Poor	Retain	7.2	4.8	Top missing
	1095	*Quercus robur - English Oak*	14.7	1.727875959	15	Good	Good	M	Regulated Tree	High	Retain	6.6	4.8	
	1096	*Crataegusmonogyna- English Hawthorn*	11	0.942477796	7.5	Fair	Good	M	Regulated Tree	Medium	Retain/remove	3.6	2.4	
	1097	*Quercus robur - English Oak*	9.5	0.785398163	3.5	Poor	Poor	EM	Regulated Tree	Low	Retain/remove	3.0	2.4	
	1098	*Quercus robur - English Oak*	13.7	1.884955592	18	Good	Good	M	Regulated Tree	Medium	Retain	7.2	4.8	Top missing

10

Group Number	Tree Number	Species	Height Range (above 6m)	Trunk Circum. (m)	Canopy Spread (m)	Health	Structure	Stage	Tree Protection Status	Tree Quality Classification	Arboricultural Recommendation	TPZ AS 4970	D10*	Comments/summary
	1099		8.2	0.942477796	6							3.6	2.4	
	1100	*Eucalyptus saligna*	17	2.670353756	14	Good	Good	EM	Regulated Tree	High	Retain as a group	10.2	7.2	
	1101	*Eucalyptus saligna*	24	2.513274123	10	Good	Good	EM	Regulated Tree	High	Retain as a group	9.6	6.4	
	1102	*Eucalyptus saligna*	24	2.042035225	11.5	Good	Good	EM	Regulated Tree	High	Retain as a group	7.8	5.6	
	1103	*Cupressus dupreziana*	16.2	1.727875959	7						Retain as a group	6.6	4.8	CRITICALLY ENDANGERED species of Cupressus refer to appendix 2 for explanation. s
	1104	*Cupressus dupreziana*	16.2	1.256637061	6						Retain as a group	4.8	3.2	
	1105	*Cupressus dupreziana*	15.7	1.256637061	6.5						Retain as a group	4.8	3.2	
	1106	*Cupressus dupreziana*		0.628318531							Retain as a group	2.4	1.6	
	1107	*Fraxinus oxycarpa - Desert*	12		5	Good	Fair	EM	Regulated Tree	Medium	Retain/remove	0.0	0.0	
Group 17	1108	*Pinus species*	11.7	0.628318531	4.5				Not Regulated			2.4	1.6	No tree group present at recorded location
	1109	*Pinus species*	11.7	0.628318531	4				Not Regulated			2.4	1.6	
	1110	*Pinus species*	11	0.942477796	4				Not Regulated			3.6	2.4	
	1111	*Pinus species*	10.7	0.628318531	3				Not Regulated			2.4	1.6	
	1112	*Pinus species*	8.5	0.628318531	3				Not Regulated			2.4	1.6	
	1113	*Pinus species*	9.7	0.785398163	4.5				Not Regulated			3.0	2.4	
	1114	*Pinus species*	12.7	1.884955592	6.5				Not Regulated			7.2	4.8	
	1115	*Pinus species*	10.7	0.942477796	5				Not Regulated			3.6	2.4	
	1116	*Pinus species*	10.7	0.785398163	4				Not Regulated			3.0	2.4	
	1117	*Pinus species*	11	0.628318531	3.5				Not Regulated			2.4	1.6	
	1118	*Pinus radiata - Monterey Pine*	22.5	2.513274123	9.5				Pest Plant (Weed)			9.6	6.4	Drought affected
	1119	*Pinus radiata - Monterey Pine*	24	3.455751919	10				Pest Plant (Weed)			13.2	8.9	
	1120	*Pinus radiata - Monterey Pine*		3.141592654					Pest Plant (Weed)			12.0	8.1	
	1121	*Tree is missing*	24.5		10				Pest Plant (Weed)			0.0	0.0	Drought affected
	1122	*Populus sp. - Poplar*	16.2	0.942477796	6	Good	Good	J	Regulated Tree	Medium		3.6	2.4	Tremuloides
	1123	*Quercus robur - English Oak*	17.7	2.513274123	15	Good	Good	M	Regulated Tree	High	Retain as a group	9.6	6.4	
	1124	*Quercus robur - English Oak*	18.5	1.884955592	12	Good	Good	M	Regulated Tree	High	Retain as a group	7.2	4.8	

Group Number	Tree Number	Species	Height Range (above 6m)	Trunk Circum. (m)	Canopy Spread (m)	Health	Structure	Stage	Tree Protection Status	Tree Quality Classification	Arboricultural Recommendation	TPZ AS 4970	D10*	Comments/summary
1125		*Acacia dealbata - Silver Wattle*	18	0.628318531	6	Fair	Fair	M	Regulated Tree	Low		2.4	1.6	
1126		*Acacia dealbata - Silver Wattle*	0.628318531		Fair		Fair	M	Regulated Tree	Low		2.4	1.6	
1127		*Acacia floribunda - White*	12.7	6				Regulated Tree		Low		0.0	0.0	
1128		*Callitris sp.- Cypress pine*	6.5	0.314159265	1.5	Good	Good	Not Regulated				1.2	0.8	
1129		*Callitris sp.- Cypress pine*	6.5	0.471238898	3	Good	Good	Not Regulated				1.8	1.6	
1130		*Tree is missing*	18.2	1.256637061	5.5							4.8	3.2	
1131		*Pinus poderosa - Western*	1.256637061		Good		Good	M	Regulated Tree	High	Retain	4.8	3.2	
1132		*Tree is dead*	18.5		6							0.0	0.0	Dead
1133		*Pinus species*	19.5	3.141592654	19	Fair	Very Good	M	Regulated Tree	High	Retain	12.0	8.1	Drought affected
1134		*Acacia dealbata - Silver Wattle*	12	0.628318531	6	Good	Good	EM	Regulated Tree	Low	Retain	2.4	1.6	
1135		*Ulmus glabra - Wych Elm*	8.5	0.785398163	5.5			Regulated Tree				3.0	2.4	
1136		*Ulmus glabra - Wych Elm*	8.2	0.471238898	4			Regulated Tree				1.8	1.6	
1137		*Pinus radiata - Monterey Pine*	21.2	2.984513021	11			Pest Plant (Weed)				11.4	8.1	
1138		*Pinus radiata - Monterey Pine*	26	3.141592654	14			Pest Plant (Weed)				12.0	8.1	
1139		*Pinus radiata - Monterey Pine*	2.35619449					Pest Plant (Weed)				9.0	6.4	
1140		*Ulmus parvifolia - Chinese Elm*	7	7				Not Regulated				0.0	0.0	
1141		*Pinus radiata - Monterey Pine*	3.141592654					Pest Plant (Weed)				12.0	8.1	
1142		*Pinus radiata - Monterey Pine*	25.2	14				Pest Plant (Weed)				0.0	0.0	
1143			1.256637061					Pest Plant (Weed)				4.8	3.2	
1144		14.5		7				Pest Plant (Weed)				0.0	0.0	
1145		*Pinus species*	7	0.628318531	5.5			Pest Plant (Weed)				2.4	1.6	
1146		*Quercus palustris - Pin Oak*	14.2	1.256637061	13	Good	Good	M	Regulated Tree	High	Retain	4.8	3.2	
	1147	*Pinus species*	16.2	0.942477796	3			Pest Plant (Weed)		Tree removed		3.6	2.4	POOR QUALITY GROUP
		Pinus species	16	1.099557429	3.5			Pest Plant (Weed)		Tree removed		4.2	3.2	
1149		*Pinus species*	14.2	0.942477796	3.5			Pest Plant (Weed)		Tree removed		3.6	2.4	

Group Number	Tree Number	Species	Height Range (above 6m)	Trunk Circum. (m)	Canopy Spread (m)	Health	Structure	Stage	Tree Protection Status	Tree Quality Classification	Arboricultural Recommendation	TPZ AS 4970	D10*	Comments/summary
	1150	*Ulmus parvifolia - Chinese Elm*	13.5	1.256637061	4	Good	Good	M	Regulated Tree	High	Retain	4.8	3.2	Yarralumla special
Group 15	1151	*Pinus species*	15.2	1.570796327	7				Pest Plant (Weed)	Tree removed		6.0	4.0	POOR QUALITY GROUP
	1152	*Pinus species*	15.5	1.099557429	6				Pest Plant (Weed)	Tree removed		4.2	3.2	
	1153	*Pinus species*	8.2	0.471238898	4				Pest Plant (Weed)	Tree removed		1.8	1.6	
	1154	*Pinus species*	14.5	0.942477796	3				Pest Plant (Weed)	Tree removed		3.6	2.4	
	1155	*Pinus species*	15.2	1.256637061	6				Pest Plant (Weed)	Tree removed		4.8	3.2	
	1156	*Pinus species*	11.7	0.942477796	3				Pest Plant (Weed)	Tree removed		3.6	2.4	
	1157	*Pinus radiata - Monterey Pine*	15	0.628318531	1.5				Pest Plant (Weed)	Tree removed		2.4	1.6	
	1158	*Pinus radiata - Monterey Pine*	17	1.570796327	6				Pest Plant (Weed)	Tree removed		6.0	4.0	
	1159	*Pinus radiata - Monterey Pine*	27.7	2.042035225	3.5				Pest Plant (Weed)	Tree removed		7.8	5.6	
	1160	*Pinus radiata - Monterey Pine*	31.5	2.042035225	4.5				Pest Plant (Weed)	Tree removed		7.8	5.6	
	1161	*Pinus radiata - Monterey Pine*	28.5	2.35619449	5				Pest Plant (Weed)	Tree removed		9.0	6.4	
	1162	*Pinus radiata - Monterey Pine*	27.7	2.199114858	5				Pest Plant (Weed)			8.4	5.6	
	1163	*Pinus radiata - Monterey Pine*	9.2	0.628318531	4				Pest Plant (Weed)			2.4	1.6	
	1164	*Sorbus domestica - Service*	10.5	0.785398163	4.5				Pest Plant (Weed)			3.0	2.4	
	1165	*Pinus radiata - Monterey Pine*	13.2	1.256637061	6				Pest Plant (Weed)			4.8	3.2	
	1166	*Quercus palustris - Pin Oak*	9.7	0.785398163	8.5				Not Regulated			3.0	2.4	
	1167	*Quercus sp.*	11.2	0.785398163	9				Not Regulated			3.0	2.4	
	1168	*Pinus radiata - Monterey Pine*	13.2	0.942477796	5				Pest Plant (Weed)	Poor		3.6	2.4	Almost dead
	1169	*Pinus radiata - Monterey Pine*	14.2	1.256637061	4.5				Pest Plant (Weed)			4.8	3.2	
	1170	*Pinus radiata - Monterey Pine*	12	1.256637061	5.5				Pest Plant (Weed)			4.8	3.2	
	1171	*Pinus radiata - Monterey Pine*	13	1.570796327	10				Pest Plant (Weed)			6.0	4.0	
	1172	*Pinus radiata - Monterey Pine*	16.5	1.256637061	6				Pest Plant (Weed)			4.8	3.2	
	1173	*Pinus radiata - Monterey Pine*	15	1.256637061	5				Pest Plant (Weed)			4.8	3.2	Group of Radiata
	1174		12.2	1.413716694	7.5							5.4	4.0	

PAUL BANGAY STUDIO

major works (preliminary)

forestry place

PAUL BANGAY
THE STUDIO

54 GWYNNE STREET CREMORNE
VIC 3121 AUSTRALIA | T +61 3 9070 6050
PRB DESIGN PTY LTD | ABN 20 066 291 076
PAULBANGAY.COM

ISSUE DATE	6th May 2026		
PROJECT STATUS	CONCEPT DESIGN		
SCALE	1:500 @ A0	PAGE	7 of 18
ARCHITECT	STEWART ARCHITECTURE		
LANDSCAPE ARCHITECT	EH	CHECKED BY	PB
CLIENT	BLOC		
PROJECT	FORESTRY PLACE, YARRALUMLA ACT		
SITE INSPECTED	23/03/2026		
AREA/ LEVEL	SITE	JOB NO.	260225
SHEET NO.	L008	ISSUE	A
DRAWING TITLE:	LANDSCAPE MANAGEMENT AND PROTECTION PLAN (4)		

[NOT FOR CONSTRUCTION]

VERIFY ALL DIMENSIONS ON SITE PRIOR TO COMMENCEMENT OF WORKS/ ORDERING. DO NOT SCALE FROM REPRODUCED/ COPIED DRAWINGS, USE ORIGINAL PLOT ONLY. CONTRACTOR AND CLIENT TO OBTAIN ALL PERMITS/ APPROVALS. STRUCTURAL ELEMENTS DETAILED BY PRB DESIGN FOR AESTHETIC REFERENCE ONLY. CHECK ALL DRAWINGS, QUANTITIES AND MATERIALS; REPORT ANY DISCREPANCIES/ ERRORS TO PRB DESIGN.

Group Number	Tree Number	Species	Height Range (above 6m)	Trunk Circum. (m)	Canopy Spread (m)	Health	Structure	Stage	Tree Protection Status	Tree Quality Classification	Arboricultural Recommendation	TPZ AS 4970	D10*	Comments/summary
	1175	*Tree is dead*	12.2	1.570796327	6				Pest Plant (Weed)		Remove refer to comments	6.0	4.0	Dead
	1176		12.5	1.570796327	8							6.0	4.0	
	1177	*Callitris sp.- Cypress pine*	19	1.570796327	7.5	Good	Poor	M	Regulated Tree	Medium	Retain/remove	6.0	4.0	
	1178	*Quercus robur - English Oak*	12.5	1.256637061	13	Fair	Good	EM	Regulated Tree	Medium		4.8	3.2	
	1179	*Pinus radiata - Monterey Pine*	19	2.199114858	11				Pest Plant (Weed)			8.4	5.6	
	1180	*Callitris sp.- Cypress pine*	15.2	1.884955592	4.5	Good	Poor	M	Regulated Tree	Medium	Retain	7.2	4.8	
	1181	*Celtisaustralis - Nettle Tree*	10.7	1.727875959	8				Pest Plant (Weed)			6.6	4.8	
	1182	*Morus sp. - Mulberry*	4.5	0.628318531	4.5	Fair	Good	EM	Not Regulated	Low	Retain/remove	2.4	1.6	
	1183	*Gleditsia triacanthos - H*	8	0.785398163	7.5	Fair	Fair	EM	Regulated Tree	Low	Retain/remove	3.0	2.4	
	1184	*Fraxinus oxycarpa - Desert Ash*	8	0.942477796	6	Fair	Good	EM	Regulated Tree	Low	Retain/remove	3.6	2.4	
	1185	*Pistacia chinensis - Chinense*	8.5	0.942477796	9	Good	Good	EM	Regulated Tree	Medium	Retain	3.6	2.4	
	1186	*Maelia azedarach - White*	8	1.256637061	6.5	Poor	Fair	EM	Regulated Tree	Low	Retain/remove	4.8	3.2	
	1187	*Styphnolobium japonicu*	8	0.942477796	10	Fair	Good	EM	Regulated Tree	Low	Retain/remove	3.6	2.4	
	1188	*Eucalyptus viminalis - Ribbon*	20	1.884955592	9.5	Fair	Good	EM	Regulated Tree	Medium	Retain	7.2	4.8	Tip dieback observed
	1189	*Eucalyptus sp. - Gum Tree*	18	1.256637061	7.5	Good	Good	EM	Regulated Tree	Medium	Retain	4.8	3.2	
	1190	*Pinus radiata - Monterey Pine*	11	1.570796327	7.5				Pest Plant (Weed)			6.0	4.0	
	1191	*Pinus radiata - Monterey Pine*	17	1.884955592	9				Pest Plant (Weed)			7.2	4.8	
	1192	*Eucalyptus saligna*	23	1.570796327	10	Good	Fair	EM	Regulated Tree	Medium	Retain	6.0	4.0	Hollow present at ~8 m AGL.
	1193	*Pinus canariensis - Canary*	19	1.256637061	5	Good	Good	M	Regulated Tree	High	Retain as a group	4.8	3.2	High Quality Group - along fence line
Group 11	1194	*Pinus canariensis - Canary*	19	1.256637061	6	Good	Good	M	Regulated Tree	High	Retain as a group	4.8	3.2	
	1195	*Pinus canariensis - Canary*	15	0.628318531	5.5	Good	Good	M	Regulated Tree	High	Retain as a group	2.4	1.6	
	1196	*Eucalyptus sp. - Gum Tree*	15	1.256637061	10	Good	Good	EM	Regulated Tree		Retain	4.8	3.2	
	1197	*Pinus radiata - Monterey Pine*	18	0.942477796	6				Pest Plant (Weed)			3.6	2.4	
	1198	*Eucalyptus blakelyi - Red Gum*	14	1.256637061	8	Good	Good	EM	Regulated Tree	Medium	Retain	4.8	3.2	Deadwood present
	1199	*Pinus radiata - Monterey Pine*	23	2.199114858	9				Pest Plant (Weed)			8.4	5.6	

Group Number	Tree Number	Species	Height Range (above 6m)	Trunk Circum. (m)	Canopy Spread (m)	Health	Structure	Stage	Tree Protection Status	Tree Quality Classification	Arboricultural Recommendation	TPZ AS 4970	D10*	Comments/summary
	1200	*Pinus radiata - Monterey Pine*	19	1.884955592	9				Pest Plant (Weed)			7.2	4.8	
	1201	*Pinus radiata - Monterey Pine*	14	1.570796327	6				Pest Plant (Weed)			6.0	4.0	
	1202	*Eucalyptus sp. - Gum Tree*	12	1.256637061	0.01			EM	Regulated Tree	Medium	Retain	4.8	3.2	Microcorys
	1203	*Tree is missing*	15	0.031415927	7.5							0.1	0.0	
	1204		23	2.827433388	13							10.8	7.2	
	1205	*Tree is dead*	20	1.727875959	7				Pest Plant (Weed)			6.6	4.8	Dead
	1206	*Tree is dead*	24	2.199114858	8				Pest Plant (Weed)			8.4	5.6	Dead
	1207	*Pinus radiata - Monterey Pine*	25	2.513274123	7				Pest Plant (Weed)			9.6	6.4	Almost dead
	1208	*Pinus radiata - Monterey Pine*	23	1.570796327	0.01				Pest Plant (Weed)			6.0	4.0	Almost dead
	1209	*Pinus radiata - Monterey Pine*	23	0.031415927	6				Pest Plant (Weed)			0.1	0.0	Almost dead
	1210	*Pinus radiata - Monterey Pine*	25	2.513274123	13				Pest Plant (Weed)			9.6	6.4	Almost dead
Group 10	1211	*Pinus radiata - Monterey Pine*	26	1.884955592	4				(Weed)			7.2	4.8	Almost dead
	1212	*Pinus radiata - Monterey Pine*	27	2.513274123	11				Pest Plant (Weed)			9.6	6.4	
	1213	*Pinus radiata - Monterey Pine*	25	2.199114858	8				Pest Plant (Weed)			8.4	5.6	
	1214	*Tree is missing*		1.884955592	0.01							7.2	4.8	
	1215	*Tree is dead*	20	0.031415927	9				Pest Plant (Weed)			0.1	0.0	Dead
	1216	*Tree is dead*	25	2.35619449	7				Pest Plant (Weed)			9.0	6.4	Dead
	1217	*Pinus radiata - Monterey Pine*	23	1.884955592	7				Pest Plant (Weed)			7.2	4.8	Drought affected
	1218	*Platanus x acerifolia - London*	5.5	0.314159265	2				Not Regulated			1.2	0.8	Stump regrowth
	1219	*Ulmus parvifolia - Chinese Elm*	9.5	0.942477796	9	Good	Fair	EM	Regulated Tree	Medium	Retain/remove	3.6	2.4	Near powerlines
	1220	*Ulmus parvifolia - Chinese Elm*	9.5	0.942477796	12	Good	Fair	EM	Regulated Tree	Medium	Retain/remove	3.6	2.4	Near powerlines
	1221	*Ulmus parvifolia - Chinese Elm*	10	1.099557429	12	Good	Fair	EM	Regulated Tree	Medium	Retain/remove	4.2	3.2	Near powerlines
	1222	*Ulmus parvifolia - Chinese Elm*	12	1.099557429	11.5	Poor	Good	EM	Regulated Tree	Medium	Retain	4.2	3.2	Stump growth observed
	1223	*Tree is dead*	6	1.256637061	8							4.8	3.2	
	1224	*Sorbus domestica - Service*	9	0.628318531	5				Pest Plant (Weed)			2.4	1.6	
	1225	*Sorbus domestica - Service*	8	0.628318531	5				Pest Plant (Weed)			2.4	1.6	

Pest Plant

Group Number	Tree Number	Species	Height Range (above 6m)	Trunk Circum. (m)	Canopy Spread (m)	Health	Structure	Stage	Tree Protection Status	Tree Quality Classification	Arboricultural Recommendation	TPZ AS 4970	D10*	Comments/summary
1226		*Casuarina cunninghamia*	10	0.785398163	5	Fair	Good	EM	Regulated Tree	Medium	Retain/remove	3.0	2.4	
1227		*Eucalyptus sp. - Gum Tree*	7	0.785398163	7			Not Regulated				3.0	2.4	Tree missing
1228		*Eucalyptus sp. - Gum Tree*	7	0.785398163	4.5			Not Regulated				3.0	2.4	
1229		*Sorbus domestica - Service*	10.5	0.628318531	4			Pest Plant (Weed)				2.4	1.6	
1230		*Sorbus domestica - Service*	9	0.628318531	4			Pest Plant (Weed)				2.4	1.6	
1231		*Pinus radiata - Monterey Pine*	25	2.042035225	9.5			Pest Plant (Weed)				7.8	5.6	
1232		*Pinus radiata - Monterey Pine*	27	2.199114858	7.5			Pest Plant (Weed)				8.4	5.6	
1233		*Pinus radiata - Monterey Pine*	25	1.884955592	9			Pest Plant (Weed)				7.2	4.8	
1234		*Pinus radiata - Monterey Pine*	25	2.35619449	9			Pest Plant (Weed)				9.0	6.4	
1235		*Pinus radiata - Monterey Pine*	26	2.35619449	6			Pest Plant (Weed)				9.0	6.4	
1236		*Pinus radiata - Monterey Pine*	19	1.884955592	8			Pest Plant (Weed)				7.2	4.8	
1237		*Cupressus sp.- Cypress*	18	2.35619449	11	Good	Good	M	Regulated Tree	High	Retain	9.0	6.4	
1238		*Quercus robur - English Oak*	17	2.199114858	18	Good	Good	M	Regulated Tree	High	Retain	8.4	5.6	
1239			19	1.099557429	6							4.2	3.2	
1240			20	1.256637061	6.5							4.8	3.2	
1241			20	1.099557429	4							4.2	3.2	
1242			23	1.884955592	7							7.2	4.8	
1243			23	1.413716694	9.5							5.4	4.0	
1244			18	1.099557429	5							4.2	3.2	
Group 8	1245	*Quercus palustris - Pin Oak*	15	1.256637061	0.01	Poor	Poor	EM	Regulated Tree	Poor	Retain/remove	4.8	3.2	Ivy at base , lopped sided canopy in group
1246		*Viburnum tinus - Lauristinus*	3	0.031415927	9			Not Regulated				0.1	0.0	
Group 8	1247	*Quercus palustris - Pin Oak*	18	1.256637061	4.5	Fair	Fair	EM	Regulated Tree	Medium	Retain as a group	4.8	3.2	MEDIUM QUALITY GROUP deadwood Present, some trees are in decline, Hanging branch in tree 1257 Retain as a group only
	1248	*Quercus palustris - Pin Oak*	23	1.727875959	7			Regulated Tree		Medium	Retain as a group	6.6	4.8	
	1249	*Quercus palustris - Pin Oak*	23	1.570796327	9			Regulated Tree		Medium	Retain as a group	6.0	4.0	
	1250	*Quercus palustris - Pin Oak*	18	0.628318531	3.5			Regulated Tree		Medium	Retain as a group	2.4	1.6	
	1251	*Quercus palustris - Pin Oak*	13	0.628318531	5			Regulated Tree		Medium	Retain as a group	2.4	1.6	
	1252	*Quercus palustris - Pin Oak*	15	0.785398163	3.5			Regulated Tree		Medium	Retain as a group	3.0	2.4	

Group Number	Tree Number	Species	Height Range (above 6m)	Trunk Circum. (m)	Canopy Spread (m)	Health	Structure	Stage	Tree Protection Status	Tree Quality Classification	Arboricultural Recommendation	TPZ AS 4970	D10*	Comments/summary
1253		*Quercus palustris - Pin Oak*	11	0.628318531	4.5			Regulated Tree		Medium	Retain as a group	2.4	1.6	
1254		*Quercus palustris - Pin Oak*	23	1.884955592	12			Regulated Tree		Medium	Retain as a group	7.2	4.8	
1255		*Quercus palustris - Pin Oak*	18	1.099557429	6			Regulated Tree		Medium	Retain as a group	4.2	3.2	
1256		*Quercus palustris - Pin Oak*	1.570796327		0.01			Regulated Tree		Medium	Retain as a group	6.0	4.0	
1257		*Quercus palustris - Pin Oak*	23	0.031415927	12	Good	Good	EM	Regulated Tree	High	Retain as a group	0.1	0.0	
1258		*Quercus palustris - Pin Oak*	1.570796327		0.01			Regulated Tree		Medium	Retain as a group	6.0	4.0	
1259		*Quercus palustris - Pin Oak*	23	0.031415927	9			Regulated Tree		Medium	Retain as a group	0.1	0.0	
1260		*Casuarina cunninghamia*	20	1.570796327	8	Good	Good	M	Regulated Tree	Medium	Retain	6.0	4.0	
1261		*Casuarina cunninghamia*	17	1.570796327	8.5	Good	Good	M	Regulated Tree	Medium	Retain	6.0	4.0	
1262		*Casuarina cunninghamia*	22	2.042035225	9	Good	Good	M	Regulated Tree	Medium	Retain	7.8	5.6	
Group 9	1263	*Brachychiton populneus*	9	0.942477796	4			Regulated Tree		Retain as a group		3.6	2.4	MEDIUM QUALITY GROUP - exhibiting fair overall health and structure
	1264	*Brachychiton populneus*	5	0.628318531	1.5			Not Regulated		Retain as a group		2.4	1.6	
	1265	*Brachychiton populneus*	5	0.628318531	3			Not Regulated		Retain as a group		2.4	1.6	
	1266	*Brachychiton populneus*	7	0.785398163	2.5			Not Regulated		Retain as a group		3.0	2.4	
	1267	*Brachychiton populneus*	6	0.785398163	4			Not Regulated		Retain as a group		3.0	2.4	
	1268	*Brachychiton populneus*	9	1.099557429	4.5			Regulated Tree		Retain as a group		4.2	3.2	
	1269	*Brachychiton populneus*	9	1.099557429	3.5			Regulated Tree		Retain as a group		4.2	3.2	
	1270	*Brachychiton populneus*	8	0.942477796	4			Regulated Tree		Retain as a group		3.6	2.4	
	1271	*Brachychiton populneus*	6.5	0.628318531	2.5			Not Regulated		Retain as a group		2.4	1.6	
	1272	*Brachychiton populneus*	7.5	1.099557429	6			Not Regulated		Retain as a group		4.2	3.2	
	1273	*Brachychiton populneus*	9	0.942477796	5.5			Regulated Tree		Retain as a group		3.6	2.4	
	1274	*Brachychiton populneus*	9	0.942477796	6			Regulated Tree		Retain as a group		3.6	2.4	
	1275	*Brachychiton populneus*	9	1.570796327	5.5			Regulated Tree		Retain as a group		6.0	4.0	
	1276	*Brachychiton populneus*	6	0.628318531	2.5			Not Regulated		Retain as a group		2.4	1.6	

Group Number	Tree Number	Species	Height Range (above 6m)	Trunk Circum. (m)	Canopy Spread (m)	Health	Structure	Stage	Tree Protection Status	Tree Quality Classification	Arboricultural Recommendation	TPZ AS 4970	D10*	Comments/summary
	1277	*Brachychiton populneus*	7	1.413716694	6.5				Not Regulated		Retain as a group	5.4	4.0	
	1278	*Brachychiton populneus*	8	1.256637061	3.5				Regulated Tree		Retain as a group	4.8	3.2	
	1279	*Brachychiton populneus*	10	1.099557429	4				Regulated Tree		Retain as a group	4.2	3.2	
	1280	*Brachychiton populneus*	7	0.628318531	3.5				Not Regulated		Retain as a group	2.4	1.6	
	1281	*Brachychiton populneus*	8	1.099557429	5				Regulated Tree		Retain as a group	4.2	3.2	
	1282	*Brachychiton populneus*	8	1.099557429	5.5				Regulated Tree		Retain as a group	4.2	3.2	
	1283	*Brachychiton populneus*	6	0.785398163	4				Not Regulated		Retain as a group	3.0	2.4	
	1284	*Brachychiton populneus*	13	0.942477796	5				Regulated Tree		Retain as a group	3.6	2.4	
	1285	*Brachychiton populneus*	7	0.785398163	3				Not Regulated		Retain as a group	3.0	2.4	
	1286	*Brachychiton populneus*	6	1.256637061	5				Not Regulated		Retain as a group	4.8	3.2	
	1287	*Brachychiton populneus*	7	0.628318531	4				Not Regulated		Retain as a group	2.4	1.6	
	1288	*Brachychiton populneus*	9	2.042035225	8				Regulated Tree		Retain as a group	7.8	5.6	
	1289	*Brachychiton populneus*	7.5	1.256637061	6				Not Regulated		Retain as a group	4.8	3.2	
	1290	*Brachychiton populneus*	8.5	0.942477796	4.5				Regulated Tree		Retain as a group	3.6	2.4	
	1291	*Brachychiton populneus*	7	0.942477796	4.5				Not Regulated		Retain as a group	3.6	2.4	
	1292	*Brachychiton populneus*	7	0.942477796	5				Not Regulated		Retain as a group	3.6	2.4	
	1293	*Brachychiton populneus*	12	0.471238898	1.5				Regulated Tree		Retain as a group	1.8	1.6	
	1294	*Brachychiton populneus*	15	0.628318531	3.5				Regulated Tree		Retain as a group	2.4	1.6	
	1295	*Brachychiton populneus*	16	0.942477796	4				Regulated Tree		Retain as a group	3.6	2.4	
	1296	*Brachychiton populneus*	7	0.628318531	5				Not Regulated		Retain as a group	2.4	1.6	
	1297	*Brachychiton populneus*	7	0.942477796	5				Not Regulated		Retain as a group	3.6	2.4	
	1298	*Brachychiton populneus*	7	1.099557429	6				Not Regulated		Retain as a group	4.2	3.2	
	1299	*Brachychiton populneus*	7	0.628318531	3				Not Regulated		Retain as a group	2.4	1.6	
	1300	*Brachychiton populneus*	7	1.256637061	6				Not Regulated		Retain as a group	4.8	3.2	

Group Number	Tree Number	Species	Height Range (above 6m)	Trunk Circum. (m)	Canopy Spread (m)	Health	Structure	Stage	Tree Protection Status	Tree Quality Classification	Arboricultural Recommendation	TPZ AS 4970	D10*	Comments/summary
	1301	*Brachychiton populneus*	8	1.256637061	7.5				Regulated Tree		Retain as a group	4.8	3.2	
	1302	*Brachychiton populneus*	8	1.570796327	8				Regulated Tree		Retain as a group	6.0	4.0	
	1303	*Eucalyptus sp. - Gum Tree*	16	0.942477796	5	Good	Fair	EM	Regulated Tree	Medium	Retain/remove	3.6	2.4	
	1304	*Eucalyptus sp. - Gum Tree*	14	1.256637061	8	Good	Fair	EM	Regulated Tree	Medium	Retain/remove	4.8	3.2	
	1305	*Eucalyptus sp. - Gum Tree*	19	1.570796327	10	Good	Fair	EM	Regulated Tree	Medium	Retain/remove	6.0	4.0	
Group 9	1306	*Brachychiton populneus*	8	1.256637061	7				Regulated Tree			4.8	3.2	
	1307	*Brachychiton populneus*	8	0.785398163	5				Regulated Tree			3.0	2.4	
	1308	*Brachychiton populneus*	8	2.827433388	14				Regulated Tree			10.8	7.2	Drought affected
	1309	*Ulmus parvifolia - Chinese Elm*	8.5	0.942477796	9	Fair	Good	EM	Regulated Tree	Low	Retain/remove	3.6	2.4	Supressed by two pines
Group 8	1310	*Quercus palustris - Pin Oak*	14	1.884955592	6	Very Poor	Poor	EM	Regulated Tree	Poor	Retain/remove	7.2	4.8	In decline
	1311	*Quercus palustris - Pin Oak*	20	1.570796327	6	Very Poor	Fair	EM	Regulated Tree	Poor	Retain/remove	6.0	4.0	In decline
	1312	*Quercus palustris - Pin Oak*	21	1.570796327	9	Good	Good	EM	Regulated Tree	High	Retain as a group	6.0	4.0	MEDIUM QUALITY GROUP - Need deadwood removed, some in decline. Retain as a group only.
	1313	*Quercus palustris - Pin Oak*	20	1.884955592	14				Regulated Tree		Retain as a group	7.2	4.8	
	1314	*Quercus palustris - Pin Oak*	18	1.256637061	9				Regulated Tree		Retain as a group	4.8	3.2	
	1315	*Quercus palustris - Pin Oak*	20	1.256637061	7				Regulated Tree		Retain as a group	4.8	3.2	
	1316	*Quercus palustris - Pin Oak*	20	1.256637061	6				Regulated Tree		Retain as a group	4.8	3.2	
	1317	*Quercus palustris - Pin Oak*	20	1.256637061	5				Regulated Tree		Retain as a group	4.8	3.2	
	1318	*Quercus palustris - Pin Oak*	20	1.099557429	5.5				Regulated Tree		Retain as a group	4.2	3.2	
	1319		11	0.785398163	5.5							3.0	2.4	
	1320	*Cupressus macrocarpa 'Horizontalis Aurea' - Golden Cypress*	16.5	2.199114858	9	Good	Fair	EM	Regulated Schedule 2	Medium	Retain	8.4	5.6	
	1321	*Cupressus macrocarpa 'Horizontalis Aurea' - Golden Cypress*	16	2.199114858	8	Good	Fair	EM	Regulated Schedule 2	Medium	Retain	8.4	5.6	
	1322	*Cupressus macrocarpa 'Horizontalis Aurea' - Golden Cypress*	16	2.513274123	9	Good	Good	M	Regulated Schedule 2	Medium	Retain	9.6	6.4	Cypress canker not a concern, monitor
	1323	*Crataegusmonogyna- English Hawthorn*	6	0.942477796	8	Poor	Fair	EM	Not Regulated	Low	Retain/remove	3.6	2.4	

Group Number	Tree Number	Species	Height Range (above 6m)	Trunk Circum. (m)	Canopy Spread (m)	Health	Structure	Stage	Tree Protection Status	Tree Quality Classification	Arboricultural Recommendation	TPZ AS 4970	D10*	Comments/summary
	1324	*Cupressus arizonica - Ariz*	15.5	1.884955592	8.5	Good	Good	M	Regulated Schedule 2	Medium	Retain	7.2	4.8	Evidence of previous improper pruning
	1325	*Celtisaustralis - Nettle Tree*	6	1.099557429	5				Pest Plant (Weed)			4.2	3.2	
	1326	*Fraxinus oxycarpa - Desert*	7	0.628318531	4.5				Not Regulated			2.4	1.6	
	1327	*Fraxinus oxycarpa - Desert*	6.2	0.628318531	5				Not Regulated			2.4	1.6	
	1328	*Acer negundo - Box Elder*	8.2	0.314159265	3.5				Pest Plant (Weed)			1.2	0.8	Cut down
	1329	*Acer negundo - Box Elder*	9	0.471238898	5				Pest Plant (Weed)			1.8	1.6	Cut down
	1330	*Quercus palustris - Pin Oak*		1.570796327		Good	Very Poor	EM	Regulated Tree	Poor	Retain as a group	6.0	4.0	Top missing
	1331	*Ligustrum lucidum - L*	2		1				Pest Plant (Weed)			0.0	0.0	
	1332	*Quercus palustris - Pin Oak*		1.256637061		Good	Good	EM	Regulated Tree	Medium	Retain as a group	4.8	3.2	
	1333		3		7.5				Pest Plant (Weed)			0.0	0.0	
	1334	*Pittosporum eugenioides 'variegatum'*	5	1.256637061	5				Not Regulated			4.8	3.2	
	1335	*Acacia melanoxylon - Blackwood*	5.2	0.942477796	5				Not Regulated			3.6	2.4	
	1336	*Cupressus sp.- Cypress*	10	0.628318531	4.5	Fair	Fair	EM	Regulated Tree	Low	Retain/remove	2.4	1.6	
	1337	*Piceaabies - Norway Spruce*	10	1.256637061	5				Regulated Tree	Poor		4.8	3.2	Dead
	1338	*Cupressus sp.- Cypress*	8	2.513274123	7.5	Good	Good	EM	Regulated Tree	Medium	Ratain	9.6	6.4	
	1339	*Pinus canariensis - Canary*	23	1.884955592	14				Regulated Tree	High	Retain as a group	7.2	4.8	
	1340	*Pinus canariensis - Canary*		1.884955592	14				Regulated Tree	High	Retain as a group	7.2	4.8	
	1341	*Pinus canariensis - Canary*	20	1.099557429	9				Regulated Tree	High	Retain as a group	4.2	3.2	
	1342	*Pinus canariensis - Canary*	21.5	2.042035225	13				Regulated Tree	High	Retain as a group	7.8	5.6	
	1343	*Pinus canariensis - Canary*	21	2.199114858	15				Regulated Tree	High	Retain as a group	8.4	5.6	
	1344	*Pinus canariensis - Canary*	24	2.670353756	18				Regulated Tree	High	Retain as a group	10.2	7.2	
	1345	*Pinus canariensis - Canary*	22.5	2.670353756	15				Regulated Tree	High	Retain as a group	10.2	7.2	
	1346	*Pinus canariensis - Canary*	22.5	2.042035225	15				Regulated Tree	High	Retain as a group	7.8	5.6	

Group Number	Tree Number	Species	Height Range (above 6m)	Trunk Circum. (m)	Canopy Spread (m)	Health	Structure	Stage	Tree Protection Status	Tree Quality Classification	Arboricultural Recommendation	TPZ AS 4970	D10*	Comments/summary
Group 4	1347	*Pinus brutiacalambrian pine*	16.5	2.042035225	16	Very Good	Very Good	M	Regulated Tree	High	Retain	7.8	5.6	HIGH QUALITY GROUP - Deadwood present
	1348	*Pinus radiata - Monterey Pine*	19	2.827433388	16				Pest Plant (Weed)			10.8	7.2	
	1349	*Pinus radiata - Monterey Pine*		2.513274123	15				Pest Plant (Weed)			9.6	6.4	
	1350	*Crataegusmonogyna- English Hawthorn*	8.5	1.099557429	8	Fair	Fair	M	Regulated Tree	Medium		4.2	3.2	
	1351	*Quercus sp.*	9	1.099557429	8	Poor	Fair		Regulated Tree			4.2	3.2	
	1352	*Pinus douglasiana- Douglas Pine*	15.5	2.199114858	14						Retain as a group	8.4	5.6	
	1353	*Pinus douglasiana- Douglas Pine*	14	2.042035225	13						Retain as a group	7.8	5.6	
	1354	*Tree Missing*	18	2.35619449	2							9.0	6.4	
	1355	*Tree Missing*	20	2.984513021	2							11.4	8.1	
	1356	*Pinus douglasiana- Douglas*	12	1.099557429	6	Good	Good	M	Regulated Tree	High	Retain as a group	4.2	3.2	
	1357	*Pinus halepenses - Aleppo*	20.5	2.827433388	12	Good	Good	M	Regulated Tree	High	Retain as a group	10.8	7.2	
	1358	*Pinus halepenses - Aleppo*	18	1.884955592	16	Good	Good	M	Regulated Tree	High	Retain as a group	7.2	4.8	
	1359	*Pinus halepenses - Aleppo*	15	1.256637061	12	Good	Good	M	Regulated Tree	High	Retain as a group	4.8	3.2	
	1360	*Pinus halepenses - Aleppo*	20	2.984513021	20	Good	Good	M	Regulated Tree	High	Retain as a group	11.4	8.1	
	1361	*Pinus michoacannacornuta*	18	1.884955592	12	Good	Good	M	Regulated Tree	High	Retain as a group	7.2	4.8	
	1362	*Pinus michoacannacornuta*	18	1.570796327	10	Good	Good	M	Regulated Tree	High	Retain as a group	6.0	4.0	
	1363	*Pinus michoacannacornuta*	15	1.413716694	8	Good	Good	M	Regulated Tree	High	Retain as a group	5.4	4.0	
	1364	*Pinus michoacannacornuta*	17.5	2.35619449	18	Good	Good	M	Regulated Tree	High	Retain as a group	9.0	6.4	
	1365	*Pinus michoacannacornuta*	17.5	2.35619449	19	Good	Good	M	Regulated Tree	High	Retain as a group	9.0	6.4	
	1366	*Pinus michoacannacornuta*	18	1.884955592	17	Good	Good	M	Regulated Tree	High	Retain as a group	7.2	4.8	
	1367	*Pinus michoacannacornuta*	14	1.099557429	8	Good	Good	M	Regulated Tree	High	Retain as a group	4.2	3.2	
	1368	*Pinus michoacannacornuta*	15	1.727875959	10	Good	Good	M	Regulated Tree	High	Retain as a group	6.6	4.8	
	1369	*Pinus michoacannacornuta*	16	2.35619449	13	Good	Good	M	Regulated Tree	High	Retain as a group	9.0	6.4	
	1370	*Pinus michoacannacornuta*	16.5	2.199114858	12	Good	Good	M	Regulated Tree	High	Retain as a group	8.4	5.6	
	1371	*Pinus michoacannacornuta*	19	2.827433388	20	Good	Good	M	Regulated Tree	High	Retain as a group	10.8	7.2	

Group Number	Tree Number	Species	Height Range (above 6m)	Trunk Circum. (m)	Canopy Spread (m)	Health	Structure	Stage	Tree Protection Status	Tree Quality Classification	Arboricultural Recommendation	TPZ AS 4970	D10*	Comments/summary
	1372	*Pinus michoacannacornuta*	15	1.570796327	10	Good	Good	M	Regulated Tree	High	Retain as a group	6.0	4.0	
	1373	*Fraxinus excelsior - Common*	8.5	1.099557429	7	Fair	Fair	M	Regulated Tree	Medium	Retain/remove	4.2	3.2	
	1374	*Fraxinus 'Raywood' - Claret*	14	2.199114858	14	Good	Fair	M	Regulated Tree	Medium	Retain/remove	8.4	5.6	Drought affected
	1375	*Eucalyptus sp. - Gum Tree*	12	1.099557429	14	Good	Fair	EM	Regulated Tree	Medium	Retain	4.2	3.2	
	1376	*Eucalyptus sp. - Gum Tree*	12	1.570796327	16	Good	Fair	EM	Regulated Tree	Medium	Retain	6.0	4.0	Scar at base
	1377	*Tree is dead*	5	0.942477796	6							3.6	2.4	Dead
	1378	*Eucalyptus sp. - Gum Tree*	14	2.827433388	20	Good	Fair	EM	Regulated Tree	High	Retain	10.8	7.2	Scar at base
	1379	*Pinus radiata - Monterey Pine*	17	1.884955592	3				Pest Plant (Weed)			7.2	4.8	
	1380	*Pinus radiata - Monterey Pine*	17.5	2.513274123	10				Pest Plant (Weed)			9.6	6.4	
	1381	*Pinus radiata - Monterey Pine*	19	2.199114858	14				Pest Plant (Weed)			8.4	5.6	Tree missing
	1382	*Pinus radiata - Monterey Pine*	20	2.670353756	14				Pest Plant (Weed)			10.2	7.2	
	1383	*Pinus radiata - Monterey Pine*	19.5	2.827433388	14				Pest Plant (Weed)			10.8	7.2	
	1384	*Pinus radiata - Monterey Pine*	21	2.984513021	8				Pest Plant (Weed)			11.4	8.1	
	1385	*Eucalyptus melliodora - Yellow Box*	8	0.942477796	7				Not Regulated			3.6	2.4	
	1386	*Pinus radiata - Monterey Pine*	21	2.984513021	9				Pest Plant (Weed)			11.4	8.1	
	1387	*Pinus radiata - Monterey Pine*	18	2.042035225	6				Pest Plant (Weed)			7.8	5.6	
	1388	*Cupressus torulosa - Bhutan*	5	0.785398163	5				Not Regulated			3.0	2.4	
	1389	*xCupressocyparis leyland*	5	0.471238898	3				Not Regulated			1.8	1.6	
	1390	*xCupressocyparis leyland*	5	0.471238898	3				Not Regulated			1.8	1.6	
	1391	*xCupressocyparis leyland*	3	0.314159265	2				Not Regulated			1.2	0.8	
	1392	*xCupressocyparis leyland*	3	0.314159265	2				Not Regulated		Retain as a group	1.2	0.8	
	1393	*xCupressocyparis leyland*	5	0.628318531	4				Not Regulated	Medium	Retain as a group	2.4	1.6	15 in a group
	1394	*xCupressocyparis leyland*	7	0.628318531	4				Not Regulated	Low	Retain as a group	2.4	1.6	
	1395	*xCupressocyparis leyland*	7	0.628318531	4				Not Regulated		Retain as a group	2.4	1.6	
	1396	*xCupressocyparis leyland*	10	0.785398163	4				Regulated Tree		Retain as a group	3.0	2.4	

Group Number	Tree Number	Species	Height Range (above 6m)	Trunk Circum. (m)	Canopy Spread (m)	Health	Structure	Stage	Tree Protection Status	Tree Quality Classification	Arboricultural Recommendation	TPZ AS 4970	D10*	Comments/summary
1397		*xCupressocyparis leyland*	10	0.785398163	5			Regulated Tree		Retain as a group		3.0	2.4	
1398		*xCupressocyparis leyland*	12	1.413716694	6			Regulated Tree		Retain as a group		5.4	4.0	
1399		*xCupressocyparis leyland*	12	1.256637061	7			Regulated Tree		Retain as a group		4.8	3.2	
1400		*xCupressocyparis leyland*	13	2.042035225	7			Regulated Tree		Retain as a group		7.8	5.6	
1401		*Cupressus torulosa - Bhutan*	15	1.884955592	8			Regulated Tree		Retain as a group		7.2	4.8	
1402		*Populus alba - Silver Poplar*	1.727875959		12			Pest Plant (Weed)				6.6	4.8	
1403		*Pinus species*	12	1.570796327	7	Good	Very Poor	EM	Regulated Tree	Poor	Retain	6.0	4.0	
1404		*Brachychiton populneus*	5	0.628318531	3			Not Regulated				2.4	1.6	
	1405	*Quercus palustris - Pin Oak*	19	2.042035225	10	Good	Poor	M	Regulated Tree	Medium	Retain as a group only	7.8	5.6	
		Quercus palustris - Pin Oak	18	1.256637061	8	Good	Good	M	Regulated Tree	High		4.8	3.2	
1407		*Quercus palustris - Pin Oak*	18	1.256637061	9	Good	Good	M	Regulated Tree	High		4.8	3.2	
1408		*Quercus palustris - Pin Oak*	18	2.35619449	12	Good	Good	M	Regulated Tree	High		9.0	6.4	HIGH QUALITY GROUP- Some deadwood hanging in canopy of few trees 1412 1413
Group 23	1409	*Quercus palustris - Pin Oak*	17	1.884955592	11	Good	Good	M	Regulated Tree	High		7.2	4.8	
1410		*Quercus palustris - Pin Oak*	19	2.513274123	13	Good	Good	M	Regulated Tree	High		9.6	6.4	Multiple trees exhibiting hanging branches
1411		*Quercus palustris - Pin Oak*	15	1.570796327	8	Good	Good	M	Regulated Tree	High		6.0	4.0	
1412		*Quercus palustris - Pin Oak*	18	1.884955592	12	Good	Good	M	Regulated Tree	High		7.2	4.8	
1413		*Quercus palustris - Pin Oak*	18	2.827433388	14	Good	Good	M	Regulated Tree	High		10.8	7.2	
1414		*Quercus ilex - Holm Oak*	10	1.099557429	7	Good	Good	EM	Regulated Tree	Medium	Retain	4.2	3.2	Evergreen oak
	1415	*Pinus radiata - Monterey Pine*	19	2.042035225	5	Good	Good	EM	Pest Plant	Retain/remove		7.8	5.6	POOR QUALITY GROUP - Weed species, very closely planted group, If retaining it must be as a group only, individual trees not worth keeping
1416		*Pinus radiata - Monterey Pine*	19	1.099557429	5				(Weed)			4.2	3.2	
1417		*Pinus radiata - Monterey Pine*	21	1.256637061	3			Pest Plant (Weed)				4.8	3.2	
Group	1418	*Pinus radiata - Monterey Pine*	21	1.884955592	6			Pest Plant (Weed)				7.2	4.8	
1419		*Pinus radiata - Monterey Pine*	20	0.628318531	2			Pest Plant (Weed)				2.4	1.6	
1420		*Pinus radiata - Monterey Pine*	21	1.099557429	4			Pest Plant (Weed)				4.2	3.2	

PAUL BANGAY STUDIO

major works (preliminary)
forestry place

PAUL BANGAY
THE STUDIO

54 GWYNNE STREET CREMORNE
VIC 3121 AUSTRALIA | T +61 3 9070 6050
PRB DESIGN PTY LTD | ABN 20 066 291 076
PAULBANGAY.COM

ISSUE DATE: 6th May 2026
PROJECT STATUS: CONCEPT DESIGN
SCALE: 1:500 @ A0
PAGE: 8 of 18
ARCHITECT: STEWART ARCHITECTURE
LANDSCAPE ARCHITECT: EH
CHECKED BY: PB
CLIENT: BLOC
PROJECT: FORESTRY PLACE, YARRALUMLA ACT
SITE INSPECTED: 23/03/2026
SITE AREA/ LEVEL:
JOB NO.: 260225
SHEET NO.: L009
ISSUE: A
DRAWING TITLE: LANDSCAPE MANAGEMENT AND PROTECTION PLAN (5)

[NOT FOR CONSTRUCTION]

VERIFY ALL DIMENSIONS ON SITE PRIOR TO COMMENCEMENT OF WORKS/ ORDERING. DO NOT SCALE FROM REPRODUCED/ COPIED DRAWINGS, USE ORIGINAL PLOT ONLY.
CONTRACTOR AND CLIENT TO OBTAIN ALL PERMITS/ APPROVALS. STRUCTURAL ELEMENTS DETAILED BY PRB DESIGN FOR AESTHETIC REFERENCE ONLY.
CHECK ALL DRAWINGS, QUANTITIES AND MATERIALS; REPORT ANY DISCREPANCIES/ ERRORS TO PRB DESIGN.

Group Number	Tree Number	Species	Height Range (above 6m)	Trunk Circum. (m)	Canopy Spread (m)	Health	Structure	Stage	Tree Protection Status	Tree Quality Classification	Arboricultural Recommendation	TPZ AS 4970	D10*	Comments/summary
	1421	Pinus radiata - Monterey Pine	21	0.942477796	4				Pest Plant (Weed)			3.6	2.4	
	1422	Pinus radiata - Monterey Pine	21	0.942477796	4				Pest Plant (Weed)			3.6	2.4	
	1423	Pinus radiata - Monterey Pine	22	1.256637061	3				Pest Plant (Weed)			4.8	3.2	
	1424	Pinus radiata - Monterey Pine	24	1.570796327	5				Pest Plant (Weed)			6.0	4.0	
	1425	Pinus radiata - Monterey Pine	26	2.042035225	6				Pest Plant (Weed)			7.8	5.6	
	1426	Pinus radiata - Monterey Pine	26	1.413716694	6				Pest Plant (Weed)			5.4	4.0	
	1427	Pinus radiata - Monterey Pine	26	1.884955592	5				Pest Plant (Weed)			7.2	4.8	
	1428	Pinus radiata - Monterey Pine	25	2.199114858	7				Pest Plant (Weed)			8.4	5.6	
	1429	Pinus radiata - Monterey Pine	9	1.099557429	2				Pest Plant (Weed)			4.2	3.2	
	1430	Pinus radiata - Monterey Pine	11	0.785398163					Pest Plant (Weed)			3.0	2.4	
	1431	Pinus radiata - Monterey Pine	23	2.35619449	9				Pest Plant (Weed)			9.0	6.4	
	1432	Pinus radiata - Monterey Pine	23	0.785398163	4				Pest Plant (Weed)			3.0	2.4	
	1433	Quercus illex - Holm Oak	9	0.942477796	6				Not Regulated		Retain	3.6	2.4	
	1434	Quercus illex - Holm Oak	9	0.942477796	8				Not Regulated		Retain	3.6	2.4	
Group 24	1435	Pinus radiata - Monterey Pine	23	2.513274123	10				Pest Plant (Weed)			9.6	6.4	POOR QUALITY GROUP
	1436	Pinus radiata - Monterey Pine	18	2.670353756	10				Pest Plant (Weed)			10.2	7.2	
	1437	Acacia baileyana - Cootamundra Wattle	5	0.785398163	6				Pest Plant (Weed)			3.0	2.4	
	1438	Quercus palustris - Pin Oak	21	2.35619449	18	Good	Good	M	Regulated Tree	Exceptional	Retain	9.0	6.4	
	1439	Quercus robur - English Oak	15	0.942477796	12	Good	Good	EM	Regulated Tree	High	Retain	3.6	2.4	
	1440	Ulmus glabra - Wych Elm	15	2.042035225	7	Poor	Poor		Regulated Tree	Poor	Retain/remove	7.8	5.6	
	1441	Tree is dead	17	1.570796327	7						Remove refer to comments	6.0	4.0	Dead
	1442	Ulmus glabra - Wych Elm	17	18.84955592	12	Good	Very Poor	M	Regulated Tree	Poor	Retain as a group	72.0	48.3	Branch failure
	1443	Ulmus glabra - Wych Elm	17	18.84955592	12	Good	Good	M	Regulated Tree	High	Retain as a group	72.0	48.3	
	1444	Pinus radiata - Monterey Pine	25	3.455751919	14				Pest Plant (Weed)			13.2	8.9	

Group Number	Tree Number	Species	Height Range (above 6m)	Trunk Circum. (m)	Canopy Spread (m)	Health	Structure	Stage	Tree Protection Status	Tree Quality Classification	Arboricultural Recommendation	TPZ AS 4970	D10*	Comments/summary
1445		Pinus species	18	2.35619449	14	Very Good	Very Good	M	Regulated Tree	Exceptional	Retain	9.0	6.4	
1446		Styphnolobium japonicu	19	1.884955592	15					High	Retain as a group	7.2	4.8	HIGH QUALITY
1447		Styphnolobium japonicu	18	1.884955592	12					High	Retain as a group	7.2	4.8	
1448		Styphnolobium japonicu	17	1.884955592	12					High	Retain as a group	7.2	4.8	
1449			15	1.256637061	10							4.8	3.2	
1450		Eucalyptus sp. - Gum Tree	9	0.942477796	7	Fair	Poor	EM	Regulated Tree	Low	Retain/remove	3.6	2.4	
1451		Eucalyptus sp. - Gum Tree	9	0.471238898	3	Fair	Fair	EM	Regulated Tree	Medium	Retain	1.8	1.6	
1452		Coryimbiamaculata	23	1.570796327	8	Good	Very Poor	M	Regulated Tree	Poor	Major Arboricultural work required refer to comments.	6.0	4.0	Major structural problems, multiple included junctions, Hollows in unions
Group 5	1453	Pinus canariensis - Canary	23	1.413716694	7	Good	Good	V	Regulated Tree	High	Retain as a group	5.4	4.0	HIGH QUALITY GROUP - Some deadwood present
	1454	Pinus canariensis - Canary	23	1.256637061	5		V		Regulated Tree	High	Retain as a group	4.8	3.2	
	1455	Pinus canariensis - Canary	24	1.256637061	4		V		Regulated Tree	High	Retain as a group	4.8	3.2	
	1456	Pinus canariensis - Canary	23	1.570796327	6		V		Regulated Tree	High	Retain as a group	6.0	4.0	
	1457	Pinus canariensis - Canary	23	1.413716694	4		V		Regulated Tree	High	Retain as a group	5.4	4.0	
	1458	Pinus canariensis - Canary	22	1.099557429	3		V		Regulated Tree	High	Retain as a group	4.2	3.2	
	1459	Pinus canariensis - Canary	22	1.099557429	3		V		Regulated Tree	High	Retain as a group	4.2	3.2	
	1460	Pinus canariensis - Canary	23	1.256637061	4		V		Regulated Tree	High	Retain as a group	4.8	3.2	
	1461	Pinus canariensis - Canary	22	1.099557429	3		V		Regulated Tree	High	Retain as a group	4.2	3.2	
	1462	Pinus canariensis - Canary	23	1.256637061	6		V		Regulated Tree	High	Retain as a group	4.8	3.2	
	1463	Pinus canariensis - Canary	23	1.570796327	8		V		Regulated Tree	High	Retain as a group	6.0	4.0	
	1464	Pinus canariensis - Canary	22	1.413716694	5		V		Regulated Tree	High	Retain as a group	5.4	4.0	
	1465	Pinus canariensis - Canary	1.727875959		10		V		Regulated Tree	High	Retain as a group	6.6	4.8	
	1466	Pinus canariensis - Canary	30	1.727875959	10		V		Regulated Tree	High	Retain as a group	6.6	4.8	
	1467	Pinus canariensis - Canary	30	1.256637061	5		V		Regulated Tree	High	Retain as a group	4.8	3.2	
	1468	Pinus canariensis - Canary	27	1.256637061	5		V		Regulated Tree	High	Retain as a group	4.8	3.2	

Group Number	Tree Number	Species	Height Range (above 6m)	Trunk Circum. (m)	Canopy Spread (m)	Health	Structure	Stage	Tree Protection Status	Tree Quality Classification	Arboricultural Recommendation	TPZ AS 4970	D10*	Comments/summary
1469		Pinus canariensis - Canary	27	1.099557429	5		V		Regulated Tree	High	Retain as a group	4.2	3.2	
1470		Pinus canariensis - Canary	28	1.727875959	7		V		Regulated Tree	High	Retain as a group	6.6	4.8	
1471		Pinus canariensis - Canary	24	1.884955592	8		V		Regulated Tree	High	Retain as a group	7.2	4.8	
1472		Pinus canariensis - Canary	26	1.727875959	7		V		Regulated Tree	High	Retain as a group	6.6	4.8	
1473		Pinus canariensis - Canary	27	1.727875959	6		V		Regulated Tree	High	Retain as a group	6.6	4.8	
1474		Pinus canariensis - Canary	26	1.884955592	11		V		Regulated Tree	High	Retain as a group	7.2	4.8	
1475		Pinus canariensis - Canary	25	1.413716694	7		V		Regulated Tree	High	Retain as a group	5.4	4.0	
1476		Pinus canariensis - Canary	24	2.199114858	9		V		Regulated Tree	High	Retain as a group	8.4	5.6	
1477		Pinus canariensis - Canary	24	1.570796327	6		V		Regulated Tree	High	Retain as a group	6.0	4.0	
1478		Taxodium mucronatum - Mexic		2.513274123	10	Poor	Good	M	Regulated Tree	Medium	Retain/remove	9.6	6.4	In decline or droughted
1479		Taxodium mucronatum - Mexican Cypress	18	2.199114858	10	Fair	Good	M	Regulated Tree	Medium	Retain/remove	8.4	5.6	In decline from drought
1480		Betula pendula - Silver Birch	9	1.099557429	4	Fair	Fair	EM	Regulated Tree	Medium	Retain/remove	4.2	3.2	
1481		Betula pendula - Silver Birch	10	1.570796327	6	Fair	Fair	EM	Regulated Tree	Medium	Retain/remove	6.0	4.0	
Group 5	1482	Pinus canariensis - Canary	22	2.042035225	10			Regulated Tree		High		7.8	5.6	HIGH QUALITY GROUP - Some deadwood present
	1483	Pinus canariensis - Canary	23	1.570796327	8			Regulated Tree		High		6.0	4.0	
	1484	Pinus canariensis - Canary	23	2.042035225	8			Regulated Tree		High		7.8	5.6	
	1485	Pinus canariensis - Canary	20	1.413716694	5			Regulated Tree		High		5.4	4.0	
	1486	Pinus canariensis - Canary	21	1.413716694	6			Regulated Tree		High		5.4	4.0	
	1487	Pinus canariensis - Canary	22	1.413716694	4			Regulated Tree		High		5.4	4.0	
	1488	Pinus canariensis - Canary	21	1.884955592	8			Regulated Tree		High		7.2	4.8	
	1489	Pinus canariensis - Canary	21	1.570796327	6			Regulated Tree		High		6.0	4.0	
	1490	Pinus canariensis - Canary	21	1.099557429	4			Regulated Tree		High		4.2	3.2	
	1491	Pinus canariensis - Canary	21	1.413716694	6			Regulated Tree		High		5.4	4.0	
	1492	Pinus canariensis - Canary	20	1.256637061	6			Regulated Tree		High		4.8	3.2	

Group Number	Tree Number	Species	Height Range (above 6m)	Trunk Circum. (m)	Canopy Spread (m)	Health	Structure	Stage	Tree Protection Status	Tree Quality Classification	Arboricultural Recommendation	TPZ AS 4970	D10*	Comments/summary
	1493	Pinus canariensis - Canary	19	1.570796327	7				Regulated Tree	High		6.0	4.0	
	1494	Eucalyptus sp. - Gum Tree	17	1.570796327	10	Good	Good	EM	Regulated Tree	Medium	Retain as a group	6.0	4.0	Possibly flooded gum and deadwood present
	1495	Eucalyptus sp. - Gum Tree	17	0.942477796	6	Good	Good	EM	Regulated Tree	Medium	Retain as a group	3.6	2.4	Possibly flooded gum
	1496	Callitris sp.- Cypress pine	12	4.71238898	8	Fair	Very Poor	M	Regulated Tree	Poor	Retain/remove	18.0	12.1	Major deadwood present
	1497	Eucalyptus sp. - Gum Tree	18	1.256637061	6	Good	Good	EM	Regulated Tree	Medium	Retain	4.8	3.2	
	1498	Eucalyptus curtisii	5	0.628318531	6				Not Regulated	Poor	Retain	2.4	1.6	Planted in 1979 from plant tissue
Group 6	1499	Pinus Roxburghii - chir pine	20	2.827433388	10	Good	Good	M	Regulated Tree	High	Retain as a group	10.8	7.2	HIGH QUALITY GROUP - deadwood present
	1500	Pinus Roxburghii - chir pine	20	2.513274123	8					High	Retain as a group	9.6	6.4	
	1501	Coryimbiamaculata	19	1.413716694	8	Fair	Very Poor	M	Regulated Tree	Poor	Major Arboricultural work required refer to comments.	5.4	4.0	Major structural problems, multiple included junctions
Group 6	1502	Pinus Roxburghii - chir pine	20	1.884955592	8					High	Retain as a group	7.2	4.8	HIGH QUALITY GROUP - deadwood present
	1503	Pinus Roxburghii - chir pine	22	2.35619449	9					High	Retain as a group	9.0	6.4	
	1504	Pinus Roxburghii - chir pine	16	1.413716694	6					High	Retain as a group	5.4	4.0	
	1505	Pinus radiata - Monterey Pine	16	1.884955592	10				Pest Plant (Weed)			7.2	4.8	Tree missing
	1506	Pinus radiata - Monterey Pine	15	1.570796327	10				Pest Plant (Weed)			6.0	4.0	Tree missing
	1507	Celtisaustralis - Nettle Tree	5	0.628318531	4				Pest Plant (Weed)			2.4	1.6	
	1508	Tree is dead	10	1.413716694	8				Pest Plant (Weed)		Remove refer to comments	5.4	4.0	Tree missing
	1509	Eucalyptus sp. - Gum Tree	15	1.099557429	5	Good	Fair	EM	Regulated Tree	Medium	Retain/remove	4.2	3.2	The primary leader has failed
	1510	Eucalyptus sp. - Gum Tree	13	0.471238898	3	Good	Fair	EM	Regulated Tree	Medium	Retain/remove	1.8	1.6	
	1511	Eucalyptus sp. - Gum Tree	16	1.256637061	6	Good	Good	EM	Regulated Tree	Medium	Retain/remove	4.8	3.2	
	1512	Eucalyptus sp. - Gum Tree	14	0.471238898	3	Fair	Poor	EM	Regulated Tree	Low	Retain/remove	1.8	1.6	Epicormic growth from stump
	1513	Eucalyptus sp. - Gum Tree	13	0.785398163	5	Good	Good	EM	Regulated Tree	Medium	Retain/remove	3.0	2.4	
	1514	Pinus pinea - Stone Pine	15	1.727875959	8	Good	Fair	M	Regulated Tree	Medium	Major Arboricultural work required refer to comments.	6.6	4.8	Major deadwood in canopy
	1515	Eucalyptus bicostata - Blue	8	0.471238898	5				Regulated Tree		Retain	1.8	1.6	
	1516	Eucalyptus bicostata - Blue	8	0.785398163	6	Fair	Good	EM	Regulated Tree	Medium	Retain	3.0	2.4	
	1517	Eucalyptus bicostata - Blue	7	0.471238898	4	Fair	Good	EM	Not Regulated	Medium	Retain	1.8	1.6	

Group Number	Tree Number	Species	Height Range (above 6m)	Trunk Circum. (m)	Canopy Spread (m)	Health	Structure	Stage	Tree Protection Status	Tree Quality Classification	Arboricultural Recommendation	TPZ AS 4970	D10*	Comments/summary
1518		Eucalyptus bicostata - Blue	8	0.785398163	5	Fair	Good	EM	Regulated Tree	Medium	Retain	3.0	2.4	
1519		Eucalyptus bicostata - Blue	8	0.471238898	5	Fair	Good	EM	Regulated Tree	Medium	Retain	1.8	1.6	
1520		Eucalyptus saligna	18	1.256637061	9	Good	Fair	EM	Regulated Tree	Medium	Retain	4.8	3.2	Scar at base, possibly saligna
1521		Tree is missing	0.785398163									3.0	2.4	Epicormic growth from stump
1522		Eucalyptus blakelyi - Red Gum	7	5				Not Regulated				0.0	0.0	Epicormic growth from stump
1523		Fraxinus sp. - Ash	7	1.099557429	6	Good	Fair	EM	Not Regulated	Medium	Retain/remove	4.2	3.2	
1524		Fraxinus sp. - Ash	7	0.942477796	6	Good	Fair	EM	Not Regulated	Medium	Retain/remove	3.6	2.4	
1525		Pinus canariensis - Canary	18	1.256637061	6	Good	Good	EM	Regulated Tree	High	Retain	4.8	3.2	On neighbours property
Group 7	1526	Quercus robur - English Oak	11	1.727875959	10	Fair	Poor	EM	Regulated Tree	Medium	Retain/Remove	6.6	4.8	Top of main Leader failure
	1527	Quercus robur - English Oak	12	1.570796327	10	Good	Medium	EM	Regulated Tree	Medium	Retain	6.0	4.0	Better than others
	1528	Quercus robur - English Oak	12	1.570796327	8	Poor	Good	EM	Regulated Tree	Medium		6.0	4.0	
	1529	Quercus robur - English Oak	11	1.413716694	11	Poor	Poor	EM	Regulated Tree			5.4	4.0	
	1530	Quercus robur - English Oak	9	1.256637061	6	Poor		EM	Regulated Tree			4.8	3.2	
	1531	Quercus robur - English Oak	11	1.256637061	6			Regulated Tree		Poor	Remove refer to comments	4.8	3.2	Dead
	1532	Quercus robur - English Oak	9	1.099557429	6		EM		Regulated Tree	Poor	Remove refer to comments	4.2	3.2	Dead
	1533	Quercus robur - English Oak	9	1.570796327	6	Very Poor	Poor	EM	Regulated Tree	Poor		6.0	4.0	Almost dead
	1534	Quercus robur - English Oak	10	1.413716694	11	Fair	Good	EM	Regulated Tree	Medium		5.4	4.0	
	1535	Quercus robur - English Oak	7	1.727875959	10	Poor	Good	EM	Regulated Tree	Poor		6.6	4.8	In decline, top missing
	1536	Quercus robur - English Oak	6	1.413716694	7			Not Regulated		Poor		5.4	4.0	In decline
1537		Platanus x acerifolia - London	15	1.570796327	10	Good	Good	M	Regulated Tree	High	Retain as a group	6.0	4.0	
1538		Pinus poderosa - Western	13	1.256637061	6	Fair	Good	EM	Regulated Tree	High	Retain	4.8	3.2	
1539		Ulmus parvifolia - Chinese Elm	13	2.199114858	6	Good	Poor	EM	Regulated Tree	Poor	Retain/remove	8.4	5.6	Multi-stemmed from the base
1540		Ulmus parvifolia - Chinese Elm	13	0.785398163	6	Good	Good	EM	Regulated Tree	Medium	Retain	3.0	2.4	
1541		Ulmus parvifolia - Chinese Elm	11	0.628318531	8	Good	Good	EM	Regulated Tree	Medium	Retain	2.4	1.6	
1542		Cupressus sempervirens 'Stricta'.- Italian Cypress	17	1.727875959	4	Good	Good	M	Regulated Tree	High	Retain as a group	6.6	4.8	

Group Number	Tree Number	Species	Height Range (above 6m)	Trunk Circum. (m)	Canopy Spread (m)	Health	Structure	Stage	Tree Protection Status	Tree Quality Classification	Arboricultural Recommendation	TPZ AS 4970	D10*	Comments/summary
	1543	Cupressus sempervirens 'Stricta'.- Italian Cypress	18	1.413716694	3	Good	Good	M	Regulated Tree	High	Retain as a group	5.4	4.0	
	1544	Cupressus sempervirens 'Stricta'.- Italian Cypress	10	2.199114858	3	Good	Good	M	Regulated Tree	High	Retain as a group	8.4	5.6	
	1545	Platanus x acerifolia - London	12	1.727875959	12	Good	Good	EM	Regulated Tree	High	Retain	6.6	4.8	
	1546	Platanus x acerifolia - London	12	1.256637061	12	Fair	Good	EM	Regulated Tree	Medium	Retain as a group	4.8	3.2	
	1547	Platanus x acerifolia - London	12	1.413716694	10	Fair	Good	EM	Regulated Tree	Medium	Retain as a group	5.4	4.0	Deadwood
	1548	Pinus poderosa - Western	16	1.413716694	6	Good	Good	EM	Regulated Tree	High	Retain as a group	5.4	4.0	
	1549	Pinus poderosa - Western	16	1.256637061	8	Good	Good	EM	Regulated Tree	High	Retain as a group	4.8	3.2	
	1550	Ulmus parvifolia - Chinese Elm	14	1.099557429	10	Good	Good	EM	Regulated Tree	Medium	Retain			

PAUL BANGAY
THE STUDIO
54 GWYNNE STREET CREMORNE
VIC 3121 AUSTRALIA | T +61 3 9070 6050
PRB DESIGN PTY LTD | ABN 20 066 291 076
PAULBANGAY.COM

ISSUE DATE 6th May 2026
PROJECT STATUS CONCEPT DESIGN
SCALE 1:500 @ A0
PAGE 9 of 18
ARCHITECT STEWART ARCHITECTURE
LANDSCAPE ARCHITECT EH
CHECKED BY PB
CLIENT BLOC
PROJECT FORESTRY PLACE, YARRALUMLA ACT
SITE INSPECTED 23/03/2026
SITE AREA/ LEVEL
260225 JOB NO.
L010 SHEET NO.
A ISSUE

LANDSCAPE MANAGEMENT AND PROTECTION PLAN (6)
DRAWING TITLE:

[NOT FOR CONSTRUCTION]

VERIFY ALL DIMENSIONS ON SITE PRIOR TO COMMENCEMENT OF WORKS/ ORDERING. DO NOT SCALE FROM REPRODUCED/ COPIED DRAWINGS, USE ORIGINAL PLOT ONLY.
CONTRACTOR AND CLIENT TO OBTAIN ALL PERMITS/ APPROVALS. STRUCTURAL ELEMENTS DETAILED BY PRB DESIGN FOR AESTHETIC REFERENCE ONLY.
CHECK ALL DRAWINGS, QUANTITIES AND MATERIALS; REPORT ANY DISCREPANCIES/ ERRORS TO PRB DESIGN.

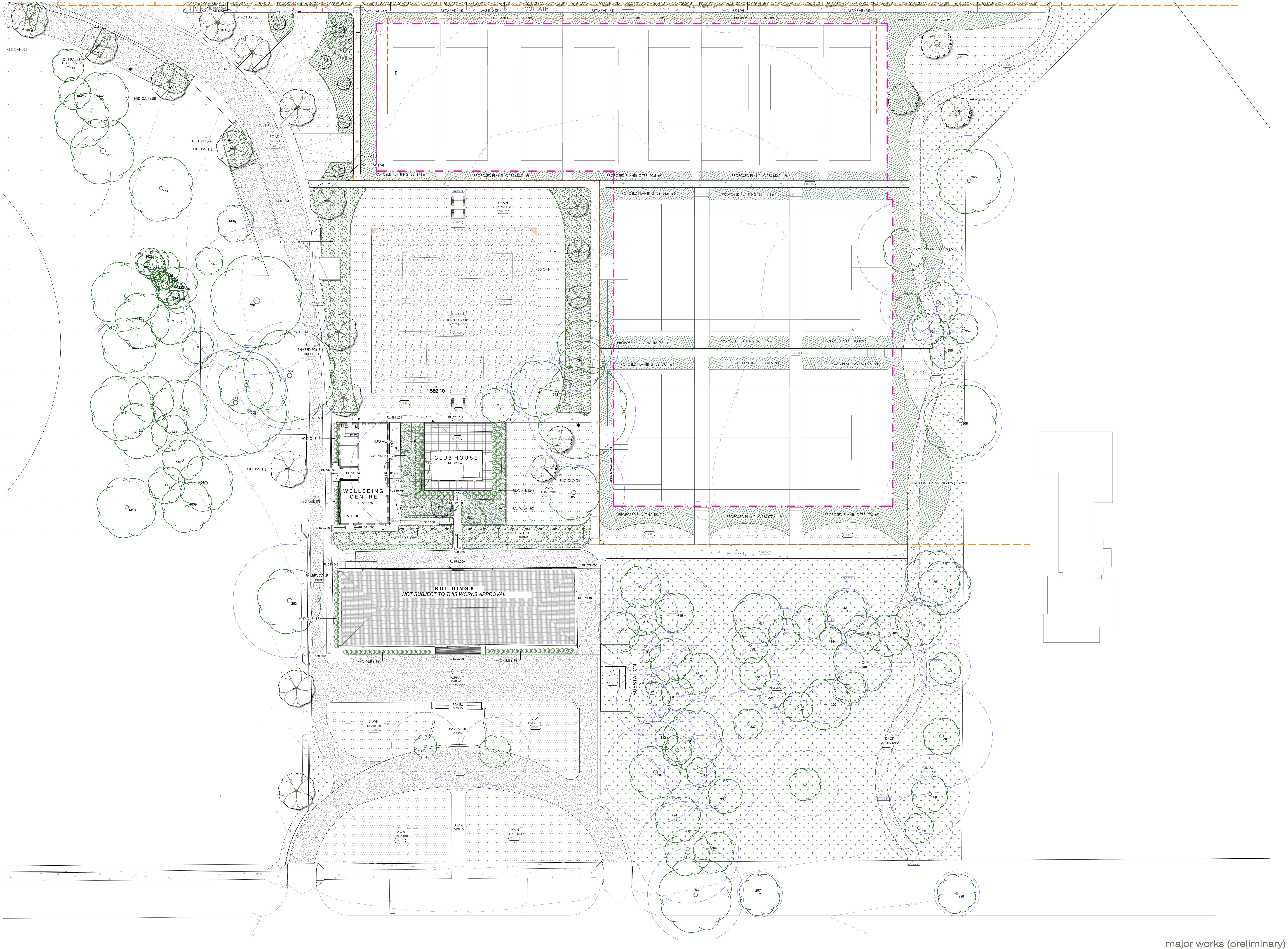
FOOTPATH
TENNIS COURTS
582.10
CLUB HOUSE
RL 581.840
WELLBEING CENTRE
RL 581.530
BUILDING 9
NOT SUBJECT TO THIS WORKS APPROVAL
SUBSTATION
OPEN SPACE CORRIDOR
SHARED ZONE concrete
ROAD ASPHALT
ASPHALT EXISTING MAKE GOOD
STAIRS EXISTING
PAVEMENT EXISTING
PATH EXISTING
LAWN INSTANT TURF
GRASS DRYLAND MIX
TRACK GRANITIC SAND
BATTERED SLOPE garden
PROPOSED PLANTING TBS
QUE PAL
HED CAN
MYO PAR
HYD QUE
RUG ALB
SAL WAV
EUC GLO
PIN ITA
ACE AUB

LEGEND

	Proposed Tree
	Proposed Shrub
	Existing Tree (retain and protect)
	Tree to be Removed / Dead Tree (subject to approval)
00.00 RL	Proposed Level
00.00 RL 00.00 NGL -000 C/F	Proposed Level, Natural Ground Level, ± Cut/ Fill
7.14% (1:14)	Proposed Grade
NOM.	Nominal Fall (TBC)
1 4 UP	Stairs (up)
XX/00	Detail Drawing No. / Sheet
℄	Centreline
	Garden Edging
	Basement
	Leasing Boundaries (TBC)
	Precinct Boundaries

PAUL BANGAY
THE STUDIO

54 GWYNNE STREET CREMORNE
VIC 3121 AUSTRALIA | T +61 3 9070 6050
PRB DESIGN PTY LTD | ABN 20 066 291 076
PAULBANGAY.COM

ISSUE DATE	6th May 2026		
PROJECT STATUS	CONCEPT DESIGN		
SCALE	1:250 @ A1	PAGE	10 of 18
ARCHITECT	STEWART ARCHITECTURE		
LANDSCAPE ARCHITECT	EH	CHECKED BY	PB
CLIENT	BLOC		
PROJECT	FORESTRY PLACE, YARRALUMLA ACT		
SITE INSPECTED	23/03/2026		
AREA/ LEVEL	RETIREMENT PRECINCT	JOB NO.	260225
SHEET NO.	L101	ISSUE	A

LANDSCAPE
GENERAL ARRANGEMENT
DRAWING TITLE:

[NOT FOR CONSTRUCTION]

VERIFY ALL DIMENSIONS ON SITE PRIOR TO COMMENCEMENT OF WORKS/ ORDERING. DO NOT SCALE FROM REPRODUCED/ COPIED DRAWINGS, USE ORIGINAL PLOT ONLY.
CONTRACTOR AND CLIENT TO OBTAIN ALL PERMITS/ APPROVALS. STRUCTURAL ELEMENTS DETAILED BY PRB DESIGN FOR AESTHETIC REFERENCE ONLY.
CHECK ALL DRAWINGS, QUANTITIES AND MATERIALS; REPORT ANY DISCREPANCIES/ ERRORS TO PRB DESIGN.

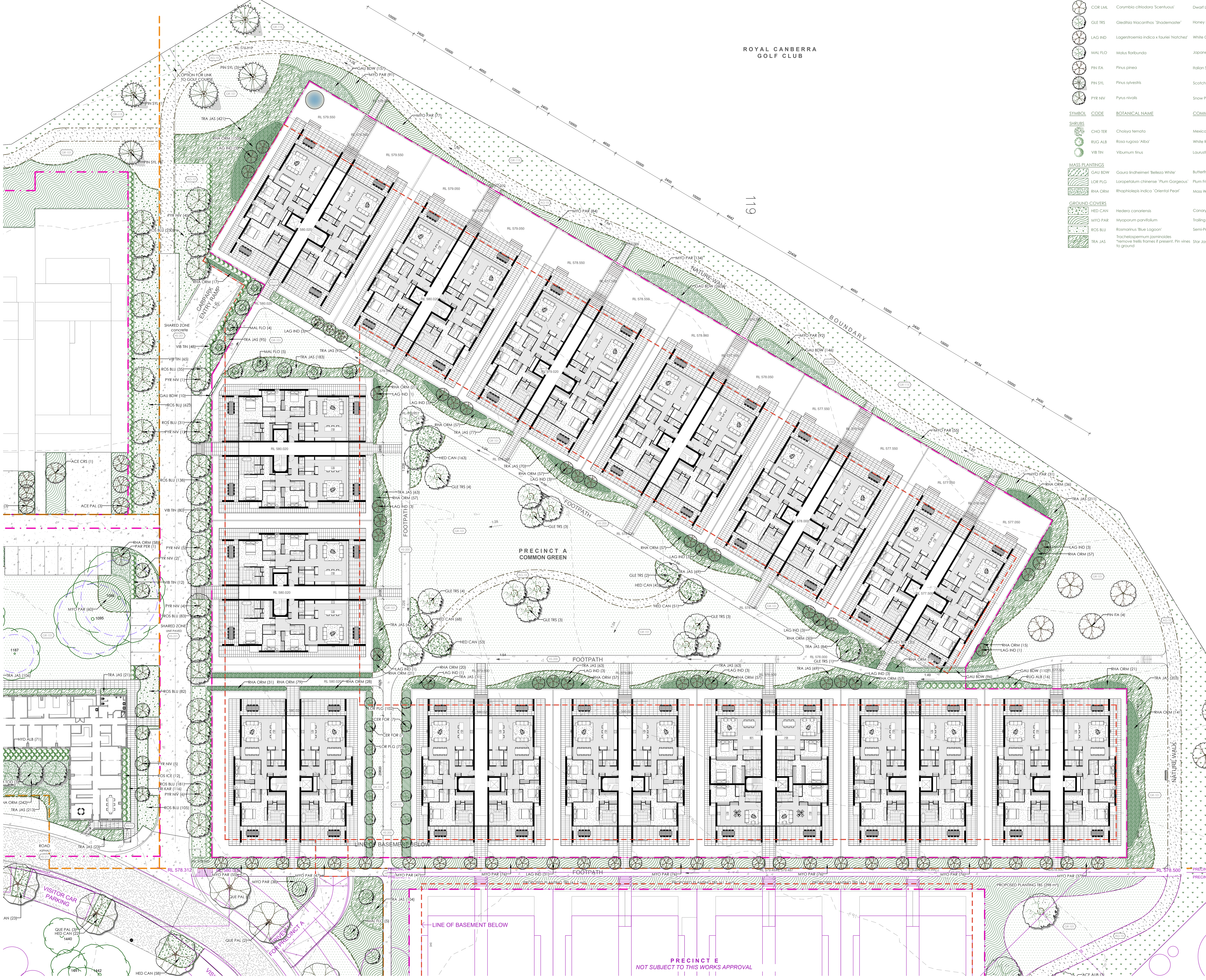

PLANT SCHEDULE PRECINCT A

SYMBOL	CODE	BOTANICAL NAME	COMMON NAME	SIZE	MIN. HEIGHT	SIZE (MATURE HXW)	EX/NV, EVG/DEC	QTY
TREES								
	CER FOR	Cercis canadensis `Forest Pansy'	Forest Pansy Redbud	200L	2m+	5x5m	Ex, Dec	14
	COR LML	Corymbia citriodora 'Scentuous'	Dwarf Lemon Scented Gum	100L	3m+	7x3m	Nv, Evg	1
	GLE TRS	Gleditsia triacanthos `Shademaster`	Honey Locust	200L	3m+	11x8m	Ex, Dec	18
	LAG IND	Lagerstroemia indica x fauriei 'Natchez'	White Crepe Myrtle	150L	2.5m+	6x4m	Ex, Dec	65
	MAL FLO	Malus floribunda	Japanese Crab Apple	100L	2m+	5x5m	Ex, Dec	9
	PIN ITA	Pinus pinea	Italian Stone Pine	800L	4m+	12x8m	Ex, Evg	7
	PIN SYL	Pinus sylvestris	Scotch Pine	100L	1.6m+	25x7m	Ex, Evg	3
	PYR NIV	Pyrus nivalis	Snow Pear	100L	3m+	8x5m	Ex, Dec	21

SYMBOL	CODE	BOTANICAL NAME	COMMON NAME	SIZE	SPACING	SIZE (MATURE HXW)	NV/EX, EVG/DEC	QTY
SHRUBS								
	CHO TER	Choisya ternata	Mexican Orange	20cm Pot	900mm	1.5x2m	Ex, Evg	20
	RUG ALB	Rosa rugosa 'Alba'	White Rugosa Rose	20cm Pot	1.2m	1.5x1.2m	Ex, Dec	16
	VIB TIN	Viburnum tinus	Laurustinus Viburnum	30cm Pot	As Shown	3x2m	Ex, Evg	128
MASS PLANTINGS								
▨	GAU BDW	Gaura lindheimeri 'Belleza White'	Butterfly Bush	14cm Pot	400mm	0.5x0.5m	Ex, Evg	779
▨	LOR PLG	Loropetalum chinense `Plum Gorgeous`	Plum Fringe Flower	14cm Pot	700mm	1.5x2m	Ex, Evg	175
▨	RHA ORM	Rhaphiolepis indica `Oriental Pearl`	Mass White Indian Hawthorn	20cm Pot	600mm	0.8x1m	Ex, Evg	1,110
GROUND COVERS								
▨	HED CAN	Hedera canariensis	Canary Island Ivy	14cm Pot	800mm	0.5x8m	Ex, Evg	149
▨	MYO PAR	Myoporum parvifolium	Trailing Myoporum	14cm Pot	800mm	0.2x1.5m	Nv, Evg	1,054
▨	ROS BLU	Rosmarinus 'Blue Lagoon'	Semi-Prostrate Rosemary	20cm Pot	700mm	1x1m	Ex, Evg	698
▨	TRA JAS	Trachelospermum jasminoides *remove trellis frames if present. Pin vines to ground	Star Jasmine	14cm Pot	700mm	0.5x2m	Ex, Evg	1,837

LEGEND

	Proposed Tree
	Proposed Shrub
	Existing Tree (retain and protect)
	Tree to be Removed / Dead Tree (subject to approval)
00.00 RL 00.00 RL	Proposed Level
00.00 RL 00.00 NGL -000 C/F	Proposed Level, Natural Ground Level, ± Cut/ Fill
7.14% (1:14)	Proposed Grade
NOM.	Nominal Fall (TBC)
1 UP 4	Stairs (up)
XX/00	Detail Drawing No. / Sheet
℄	Centreline
— - - —	Garden Edging
— — —	Basement
— • —	Leasing Boundaries (TBC)
— —	Precinct Boundaries

PAUL BANGAY
THE STUDIO

54 GWYNNE STREET CREMORNE
VIC 3121 AUSTRALIA | T +61 3 9070 6050
PRB DESIGN PTY LTD | ABN 20 066 291 076
PAULBANGAY.COM

ISSUE DATE 6th May 2026
PROJECT STATUS CONCEPT DESIGN
SCALE 1:250 @ A0 PAGE 11 of 18
ARCHITECT STEWART ARCHITECTURE
LANDSCAPE ARCHITECT EH CHECKED BY PB
CLIENT BLOC
PROJECT FORESTRY PLACE, YARRALUMLA ACT
SITE INSPECTED 23/03/2026
AREA/ LEVEL PRECINCT A JOB NO. 260225
SHEET NO. L102 ISSUE A

LANDSCAPE GENERAL ARRANGEMENT
DRAWING TITLE:

[NOT FOR CONSTRUCTION]

VERIFY ALL DIMENSIONS ON SITE PRIOR TO COMMENCEMENT OF WORKS/ ORDERING. DO NOT SCALE FROM REPRODUCED/ COPIED DRAWINGS, USE ORIGINAL PLOT ONLY.
CONTRACTOR AND CLIENT TO OBTAIN ALL PERMITS/ APPROVALS. STRUCTURAL ELEMENTS DETAILED BY PRB DESIGN FOR AESTHETIC REFERENCE ONLY.
CHECK ALL DRAWINGS, QUANTITIES AND MATERIALS; REPORT ANY DISCREPANCIES/ ERRORS TO PRB DESIGN.

major works (preliminary)
forestry place

PAUL BANGAY STUDIO

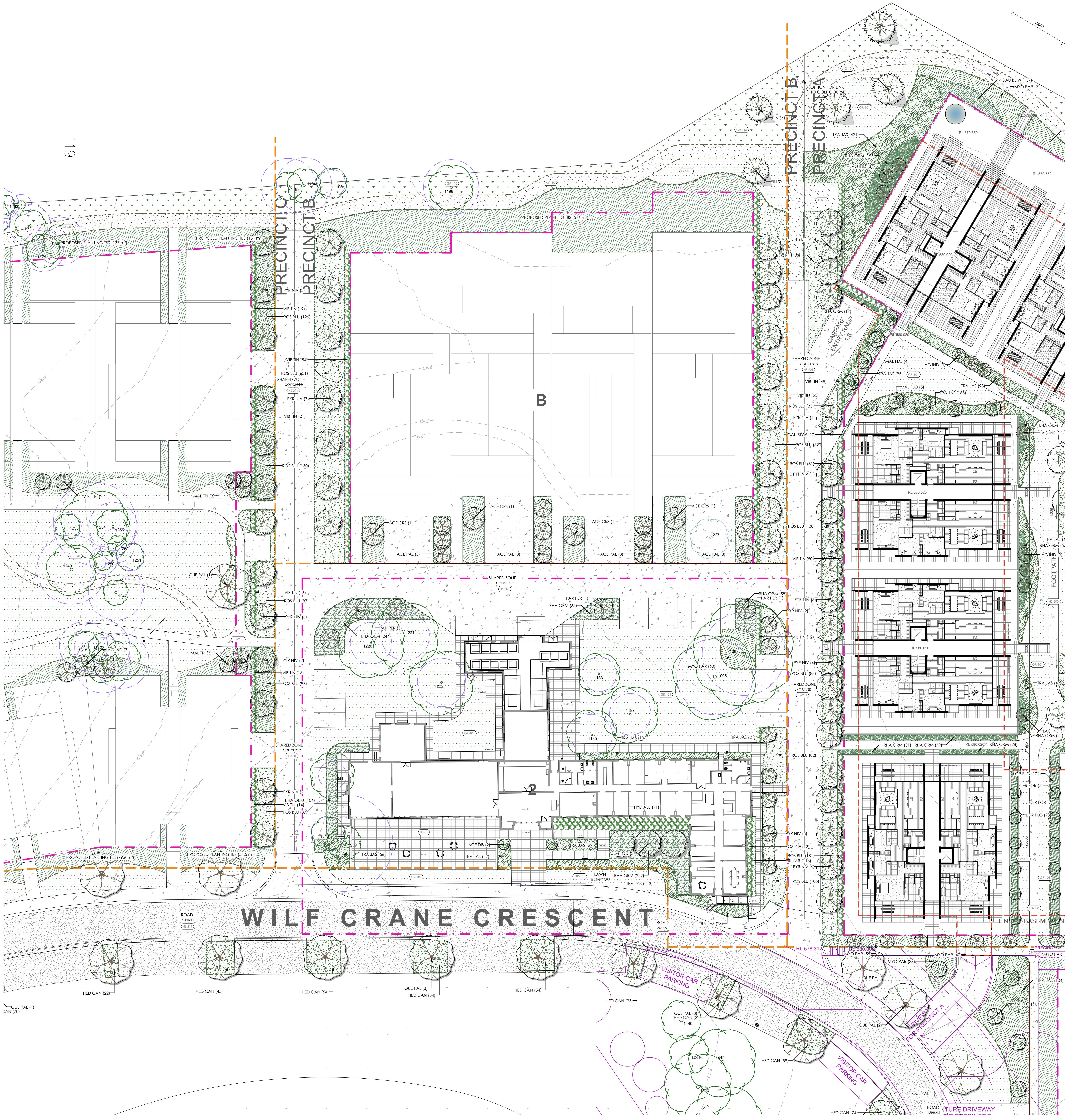
119
PRECINCT C
PRECINCT B
PRECINCT A
B
2
WILF CRANE CRESCENT
OPTION FOR LINK TO GOLF COURSE
CARPARK ENTRY RAMP 1:6
FOOTPATH
PROPOSED PLANTING TBS (137 m²)
PROPOSED PLANTING TBS (131 m²)
PROPOSED PLANTING TBS (376 m²)
PROPOSED PLANTING TBS (79.6 m²)
PROPOSED PLANTING TBS (54.5 m²)
SHARED ZONE concrete
SHARED ZONE UNIT PAVED
LAWN INSTANT TURF
ROAD ASPHALT
VISITOR CAR PARKING
LINE OF BASEMENT
RL 578.312
RL 580.020
RL 579.550
ACE CRS (1)
ACE PAL (3)
MAL TRI (2)
MAL TRI (3)
QUE PAL (1)
VIB TIN (19)
ROS BLU (126)
PYR NIV (7)
ROS BLU (130)
RHA ORM (244)
MYO PAR (60)
TRA JAS (106)
HYD ALB (71)
HED CAN (22)
HED CAN (45)
HED CAN (54)
HED CAN (23)
HED CAN (58)
HED CAN (74)
QUE PAL (3)
GAU BDW (157)
MYO PAR (91)
PIN SYL (1)
TRA JAS (421)
RHA ORM (17)
MAL FLO (4)
LAG IND (3)
TRA JAS (183)
RHA ORM (31)
RHA ORM (79)
LOR PLG (102)
CER FOR (7)
TURE DRIVEWAY

LEGEND

	Proposed Tree
	Proposed Shrub
	Existing Tree (retain and protect)
	Tree to be Removed / Dead Tree (subject to approval)
00.00 RL	Proposed Level
00.00 RL 00.00 NGL -000 C/F	Proposed Level, Natural Ground Level, ± Cut/ Fill
7.14% (1:14)	Proposed Grade
NOM.	Nominal Fall (TBC)
1 4 UP	Stairs (up)
XX/00	Detail Drawing No. / Sheet
℄	Centreline
	Garden Edging
	Basement
	Leasing Boundaries (TBC)
	Precinct Boundaries

PAUL BANGAY
THE STUDIO

54 GWYNNE STREET CREMORNE
VIC 3121 AUSTRALIA | T +61 3 9070 6050
PRB DESIGN PTY LTD | ABN 20 066 291 076
PAULBANGAY.COM

ISSUE DATE 6th May 2026
PROJECT STATUS CONCEPT DESIGN
SCALE 1:250 @ A0 PAGE 12 of 18
ARCHITECT STEWART ARCHITECTURE
LANDSCAPE ARCHITECT EH CHECKED BY PB
CLIENT BLOC
PROJECT FORESTRY PLACE, YARRALUMLA ACT
SITE INSPECTED 23/03/2026
AREA/ LEVEL PRECINCT B JOB NO. 260225
SHEET NO. L103 ISSUE A
DRAWING TITLE: LANDSCAPE GENERAL ARRANGEMENT

[NOT FOR CONSTRUCTION]

VERIFY ALL DIMENSIONS ON SITE PRIOR TO COMMENCEMENT OF WORKS/ ORDERING. DO NOT SCALE FROM REPRODUCED/ COPIED DRAWINGS, USE ORIGINAL PLOT ONLY.
CONTRACTOR AND CLIENT TO OBTAIN ALL PERMITS/ APPROVALS. STRUCTURAL ELEMENTS DETAILED BY PRB DESIGN FOR AESTHETIC REFERENCE ONLY.
CHECK ALL DRAWINGS, QUANTITIES AND MATERIALS; REPORT ANY DISCREPANCIES/ ERRORS TO PRB DESIGN.

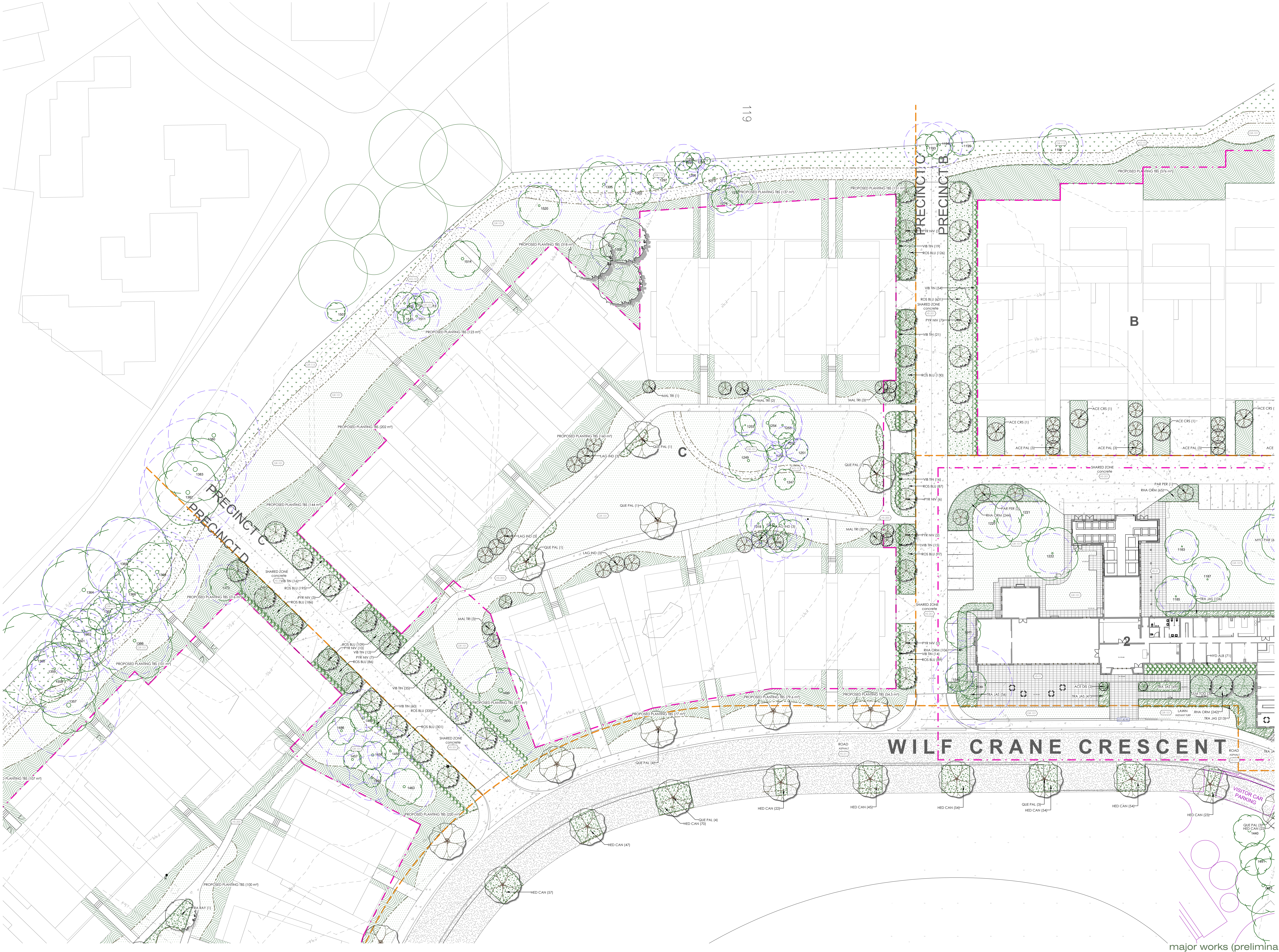
119
PRECINCT C
PRECINCT B
PRECINCT C
PRECINCT D
B
C
2
WILF CRANE CRESCENT
VISITOR CAR PARKING
PROPOSED PLANTING TBS (318 m²)
PROPOSED PLANTING TBS (137 m²)
PROPOSED PLANTING TBS (151 m²)
PROPOSED PLANTING TBS (576 m²)
PROPOSED PLANTING TBS (123 m²)
PROPOSED PLANTING TBS (202 m²)
PROPOSED PLANTING TBS (160 m²)
PROPOSED PLANTING TBS (144 m²)
PROPOSED PLANTING TBS (216 m²)
PROPOSED PLANTING TBS (101 m²)
PROPOSED PLANTING TBS (107 m²)
PROPOSED PLANTING TBS (271 m²)
PROPOSED PLANTING TBS (77 m²)
PROPOSED PLANTING TBS (79.4 m²)
PROPOSED PLANTING TBS (54.5 m²)
PROPOSED PLANTING TBS (220 m²)
PROPOSED PLANTING TBS (100 m²)
SHARED ZONE concrete
ROAD ASPHALT
LAWN
MAL TRI (1)
MAL TRI (2)
MAL TRI (3)
QUE PAL (1)
QUE PAL (4)
LAG IND (3)
VIB TIN (19)
ROS BLU (126)
PYR NIV (7)
ROS BLU (130)
ACE CRS (1)
ACE PAL (3)
RHA ORM (65)
PAR PER (1)
RHA ORM (244)
TRA JAS (106)
HYD ALB (71)
TRA JAS (54)
TRA JAS (47)
ACE DIS (2)
RHA ORM (242)
TRA JAS (213)
MYO PAR
HED CAN (22)
HED CAN (45)
HED CAN (54)
HED CAN (70)
HED CAN (47)
HED CAN (57)
HED CAN (23)
VIB TIN (35)
VIB TIN (60)
ROS BLU (335)
ROS BLU (301)
RA RAY (1)

LEGEND

Proposed Tree
Proposed Shrub
Existing Tree (retain and protect)
Tree to be Removed / Dead Tree (subject to approval)
00.00 RL — Proposed Level
00.00 RL 00.00 NGL -000 C/F — Proposed Level, Natural Ground Level, ± Cut/ Fill
7.14% (1:14) — Proposed Grade
NOM. — Nominal Fall (TBC)
1 4 UP — Stairs (up)
XX/00 — Detail Drawing No. / Sheet
Centreline
Garden Edging
Basement
Leasing Boundaries (TBC)
Precinct Boundaries

PAUL BANGAY
THE STUDIO

54 GWYNNE STREET CREMORNE
VIC 3121 AUSTRALIA | T +61 3 9070 6050
PRB DESIGN PTY LTD | ABN 20 066 291 076
PAULBANGAY.COM

ISSUE DATE	6th May 2026		
PROJECT STATUS	CONCEPT DESIGN		
SCALE	1:250 @ A0	PAGE	13 of 18
ARCHITECT	STEWART ARCHITECTURE		
LANDSCAPE ARCHITECT	EH	CHECKED BY	PB
CLIENT	BLOC		
PROJECT	FORESTRY PLACE, YARRALUMLA ACT		
SITE INSPECTED	23/03/2026		
AREA/ LEVEL	PRECINCT C	JOB NO.	260225
SHEET NO.	L104	ISSUE	A

LANDSCAPE GENERAL ARRANGEMENT
DRAWING TITLE:

[NOT FOR CONSTRUCTION]

VERIFY ALL DIMENSIONS ON SITE PRIOR TO COMMENCEMENT OF WORKS/ ORDERING. DO NOT SCALE FROM REPRODUCED/ COPIED DRAWINGS, USE ORIGINAL PLOT ONLY. CONTRACTOR AND CLIENT TO OBTAIN ALL PERMITS/ APPROVALS. STRUCTURAL ELEMENTS DETAILED BY PRB DESIGN FOR AESTHETIC REFERENCE ONLY. CHECK ALL DRAWINGS, QUANTITIES AND MATERIALS; REPORT ANY DISCREPANCIES/ ERRORS TO PRB DESIGN.

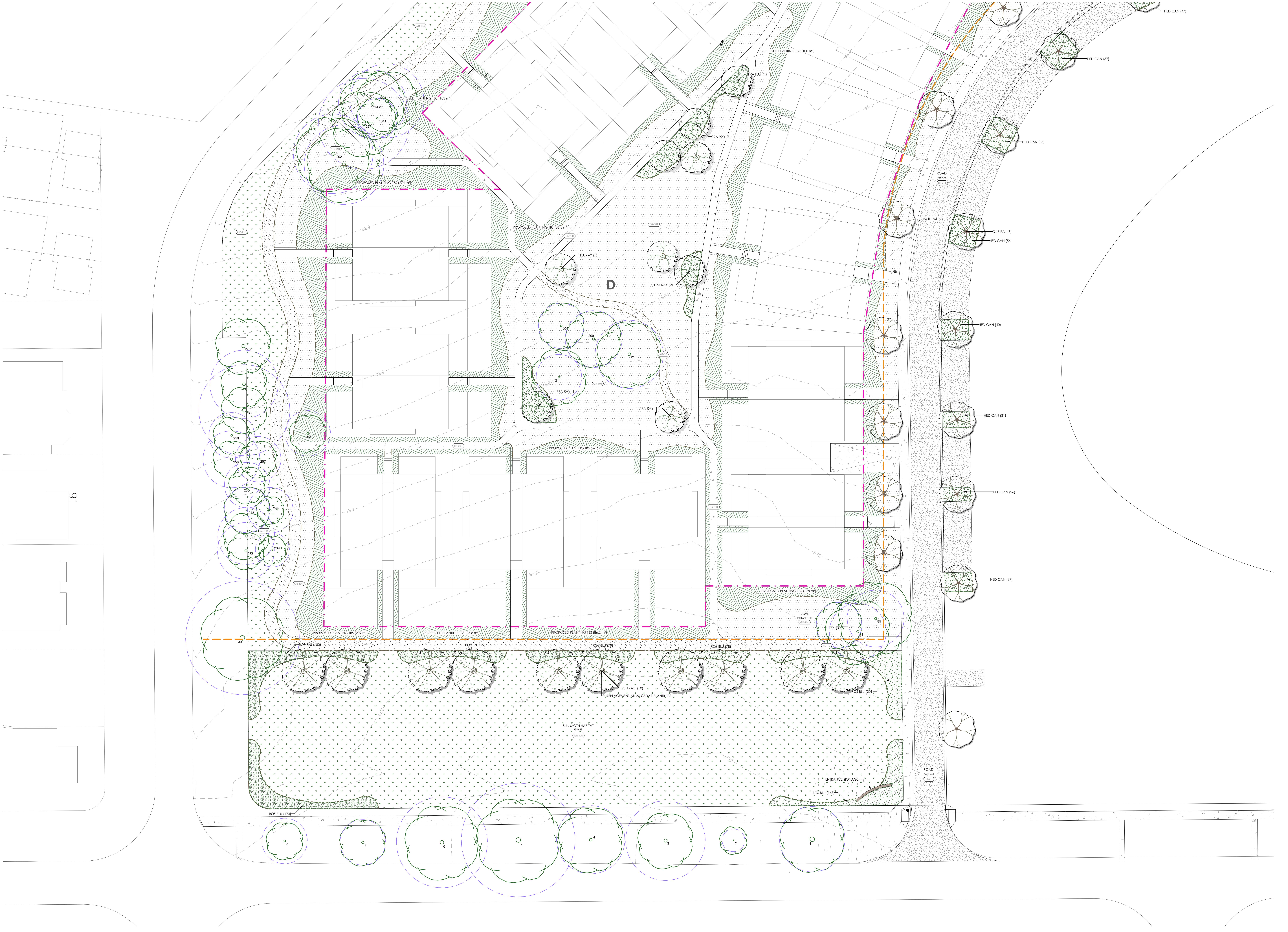
PROPOSED PLANTING TBS (103 m²)
1342
1339
1341
227
292
291
GR-115
GR-101
PROPOSED PLANTING TBS (274 m²)
PROPOSED PLANTING TBS (100 m²)
FRA RAY (1)
FRA RAY (3)
PROPOSED PLANTING TBS (86.5 m²)
HS-200
FRA RAY (1)
D
FRA RAY (2)
AG-10
208
209
210
211
FRA RAY (1)
FRA RAY (1)
PROPOSED PLANTING TBS (67.6 m²)
HED CAN (47)
HED CAN (57)
HED CAN (56)
ROAD
ASPHALT
HS-211
QUE PAL (7)
QUE PAL (8)
HED CAN (56)
HED CAN (40)
HED CAN (31)
HED CAN (26)
HED CAN (37)
273
272
263
262
259
258
257
250
244
243
242
239
238
91
PROPOSED PLANTING TBS (178 m²)
LAWN
INSTANT TURF
87
85
84
30
PROPOSED PLANTING TBS (209 m²)
PROPOSED PLANTING TBS (85.8 m²)
PROPOSED PLANTING TBS (86.2 m²)
ROS BLU (180)
ROS BLU (79)
ROS BLU (79)
ROS BLU (78)
CED ATL (10)
REPLACEMENT ATLAS CEDAR PLANTINGS
ROS BLU (201)
SUN MOTH HABITAT
GRASS
GR-120
ENTRANCE SIGNAGE
ROS BLU (168)
ROS BLU (173)
ROAD
ASPHALT
HS-211
8
7
6
5
4
3
2
1

LEGEND

	Proposed Tree Proposed Shrub
	Existing Tree (retain and protect)
	Tree to be Removed / Dead Tree (subject to approval)
00.00 RL	Proposed Level
00.00 RL 00.00 NGL -000 C/F	Proposed Level, Natural Ground Level, ± Cut/ Fill
7.14% (1:14)	Proposed Grade
NOM.	Nominal Fall (TBC)
1 4 UP	Stairs (up)
XX/00	Detail Drawing No. / Sheet
℄	Centreline
— - - —	Garden Edging
- - -	Basement
— · —	Leasing Boundaries (TBC)
— —	Precinct Boundaries

PAUL BANGAY
THE STUDIO

54 GWYNNE STREET CREMORNE
VIC 3121 AUSTRALIA | T +61 3 9070 6050
PRB DESIGN PTY LTD | ABN 20 066 291 076
PAULBANGAY.COM

ISSUE DATE	6th May 2026		
PROJECT STATUS	CONCEPT DESIGN		
SCALE	1:250 @ A0	PAGE	14 of 18
ARCHITECT	STEWART ARCHITECTURE		
LANDSCAPE ARCHITECT	EH	CHECKED BY	PB
CLIENT	BLOC		
PROJECT	FORESTRY PLACE, YARRALUMLA ACT		
SITE INSPECTED	23/03/2026		
AREA/ LEVEL	PRECINCT D	JOB NO.	260225
SHEET NO.	L105	ISSUE	A

LANDSCAPE
GENERAL ARRANGEMENT
DRAWING TITLE:

N

[NOT FOR CONSTRUCTION]

VERIFY ALL DIMENSIONS ON SITE PRIOR TO COMMENCEMENT OF WORKS/ ORDERING. DO NOT SCALE FROM REPRODUCED/ COPIED DRAWINGS, USE ORIGINAL PLOT ONLY.
CONTRACTOR AND CLIENT TO OBTAIN ALL PERMITS/ APPROVALS. STRUCTURAL ELEMENTS DETAILED BY PRB DESIGN FOR AESTHETIC REFERENCE ONLY.
CHECK ALL DRAWINGS, QUANTITIES AND MATERIALS; REPORT ANY DISCREPANCIES/ ERRORS TO PRB DESIGN.

PLANT SCHEDULE WILF

SYMBOL	CODE	BOTANICAL NAME	COMMON NAME	SIZE	MIN. HEIGHT	SIZE (MATURE HXW)	EX/NV, EVG/DEC	QTY
TREES								
◯	ACE DIS	Acer pal. dissectum `Seiryu`	Cutleaf Green Japanese Maple	150L	2m+	4x4m	Ex, Dec	2
◯	ARB STR	Arbutus unedo	Strawberry Tree	100L	2m+	7x5m	Ex, Evg	1
◯	CED ATL	Cedrus atlantica	Atlas Cedar	100L	1.8m+	30x12m	Ex, Evg	10
◯	EUC GLO	Eucalyptus globulus	Tasmanian Blue Gum	45L	1.6m+	20x10m	Nv. Evg	2
◯	MAL FLO	Malus floribunda	Japanese Crab Apple	100L	2m+	5x5m	Ex, Dec	6
◯	PAR PER	Parrotia persica	Persian Ironwood	100L	3m+	7x5m	Ex, Dec	5
◯	PIN ITA	Pinus pinea	Italian Stone Pine	100L	4m+	12x8m	Ex, Evg	3
◯	PYR NIV	Pyrus nivalis	Snow Pear	100L	3m+	8x5m	Ex, Dec	7
◯	QUE PAL	Quercus palustris	Pin Oak	200L	3m+	15x8m	Ex, Dec	39
◯	ULM TOD	Ulmus parvifolia 'Todd'	Chinese Elm	200L	3m+	10x11m	Ex, Dec	3

SYMBOL	CODE	BOTANICAL NAME	COMMON NAME	SIZE	SPACING	SIZE (MATURE HXW)	NV/EX, EVG/DEC	QTY
SHRUBS								
◯	HYD ALB	Hydrangea macrophylla 'Alba'	Mophead Hydrangea	20cm Pot	1000mm	1.4x1.6m	Ex, Dec	71
◯	HYD QUE	Hydrangea quercifolia	Oakleaf Hydrangea	20cm Pot	1000mm	1.8x2.5m	Ex, Dec	73
◯	ROS ICE	Rosa 'Iceberg'	White Bush Rose	20cm Pot	1.2m	1.2x0.9m	Ex, Dec	12
◯	RUG ALB	Rosa rugosa 'Alba'	White Rugosa Rose	20cm Pot	1.2m	1.5x1.2m	Ex, Dec	68
◯	VIB TIN	Viburnum tinus	Laurustinus Viburnum	30cm Pot	As Shown	3x2m	Ex, Evg	12
MASS PLANTINGS								
▨	RHA ORM	Rhaphiolepis indica `Oriental Pearl`	Mass White Indian Hawthorn	20cm Pot	600mm	0.8x1m	Ex, Evg	715
GROUND COVERS								
▨	ERI KAR	Erigeron karvinskianus	Seaside Daisy	14cm Pot	300mm	0.5x1m	Ex, Evg	116
▨	HED CAN	Hedera canariensis	Canary Island Ivy	14cm Pot	800mm	0.5x8m	Ex, Evg	1,679
▨	MYO PAR	Myoporum parvifolium	Trailing Myoporum	14cm Pot	800mm	0.2x1.5m	Nv, Evg	280
▨	ROS BLU	Rosmarinus 'Blue Lagoon'	Semi-Prostrate Rosemary	14cm Pot	700mm	1x1m	Ex, Evg	1,208
▨	TRA ASI	Trachelospermum asiaticum	Asian Jasmine	14cm Pot	600mm	0.2x3m	Ex, Evg	683
▨	TRA JAS	Trachelospermum jasminoides *remove trellis frames if present. Pin vines to ground	Star Jasmine	14cm Pot	700mm	0.5x2m	Ex, Evg	417

119
119
TENNIS COURTS
GRANITIC SAND
582.10
QUE PAL (2)
SHARED ZONE
concrete
HYD QUE (9)
RUG ALB (34)
SAL WAV (117)
CLUB HOUSE
RL 581.940
WELLBEING CENTRE
RL 581.530
ARB STR (1)
SAL WAV (80)
RUG ALB (34)
EUC GLO (2)
LAWN
INSTANT TURF
BATTERED SLOPE
garden
BUILDING 9
NOT SUBJECT TO THIS WORKS APPROVAL
HYD QUE (17)
HYD QUE (19)
ASPHALT
EXISTING, MAKE GOOD
STAIRS
EXISTING
OPEN SPACE CORRIDOR
SUBSTATION
GRASS
DRYLAND MIX

LEGEND

◯	Proposed Tree
	Proposed Shrub
◯	Existing Tree (retain and protect)
◯	Tree to be Removed / Dead Tree (subject to approval)
00.00 RL	Proposed Level
00.00 RL 00.00 NGL -000 C/F	Proposed Level, Natural Ground Level, ± Cut/ Fill
7.14% (1:14)	Proposed Grade
NOM.	Nominal Fall (TBC)
1 4 UP	Stairs (up)
XX/00	Detail Drawing No. / Sheet
℄	Centreline
— - - —	Garden Edging
— — —	Basement
— · —	Leasing Boundaries (TBC)
— —	Precinct Boundaries

PAUL BANGAY
THE STUDIO

54 GWYNNE STREET CREMORNE
VIC 3121 AUSTRALIA | T +61 3 9070 6050
PRB DESIGN PTY LTD | ABN 20 066 291 076
PAULBANGAY.COM

ISSUE DATE	6th May 2026		
PROJECT STATUS	CONCEPT DESIGN		
SCALE	1:500 @ A0	PAGE	15 of 18
ARCHITECT	STEWART ARCHITECTURE		
LANDSCAPE ARCHITECT	EH	CHECKED BY	PB
CLIENT	BLOC		
PROJECT	FORESTRY PLACE, YARRALUMLA ACT		
SITE INSPECTED	23/03/2026		
AREA/ LEVEL	PRECINCT D	JOB NO.	260225
SHEET NO.	L105	ISSUE	A

DRAWING TITLE: WILF CRANE CR AND COMMUNITY ZONES GENERAL ARRANGEMENT

N

[NOT FOR CONSTRUCTION]

VERIFY ALL DIMENSIONS ON SITE PRIOR TO COMMENCEMENT OF WORKS/ ORDERING. DO NOT SCALE FROM REPRODUCED/ COPIED DRAWINGS, USE ORIGINAL PLOT ONLY.
CONTRACTOR AND CLIENT TO OBTAIN ALL PERMITS/ APPROVALS. STRUCTURAL ELEMENTS DETAILED BY PRB DESIGN FOR AESTHETIC REFERENCE ONLY.
CHECK ALL DRAWINGS, QUANTITIES AND MATERIALS; REPORT ANY DISCREPANCIES/ ERRORS TO PRB DESIGN.

PAUL BANGAY STUDIO

major works (preliminary)
forestry place

REFERENCE NOTES SCHEDULE SITE

PHOTO	SYMBOL	CODE	DESCRIPTION	Size	Colour	Supplier	Details	Install Type
AGGREGATE								
	▨	AG-10	Granitic Sand	20mm minus, compacted to 95% MMDD	cream / red	Locally sourced	Install in two compacted layers	proprietary stabiliser additive to be incorporated according to manufacturer recommendations

PHOTO	SYMBOL	CODE	DESCRIPTION
FURNISHINGS			
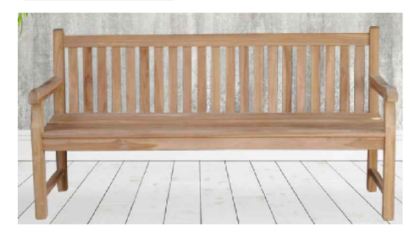	▭	FT-101	Bench Seat

PHOTO	SYMBOL	CODE	DESCRIPTION	Type	Specification
GARDEN EDGING					
	— - — -	GE-101	Steel Edge (typical)	Mild Steel	75x5mm, Grade 300, staked @ 1m centres
	— —	GE-102	Retaining Garden Bed Edge	Mild Steel/ DuraGal	10mm, Grade 300. Painted Black (epoxy enamel)

PHOTO	SYMBOL	CODE	DESCRIPTION	Type	Installation	Supplier
GRASS SURFACES						
	⠿	GR-101	'Canberra Blend'	Tall Fescue, Kentucky Blue blend	Disperse Lawn Starter mix over prepared area. Refer detail.	Canturf
	▨	GR-115	Dryland Grass Blend	Exotic grass mix, suited to local conditions	Sow with adequate soil moisture in early autumn at 10–20 mm	
	▨	GR-120	Existing Lawn to be Renovated	Existing, retained	Repair/ Top Dress any damage	

PHOTO	SYMBOL	CODE	DESCRIPTION	Material	Unit Size	Notes	Colour/ Description	Pattern	Finish
HARDSTAND									
	▦	HS-01	Unit Paving (stack) 8x4	Stone	800 x 400mm	to 100mm RC base		Stack Bond	apply penetrating sealer
	—	HS-45	Stair Treads (length) - type 1	To match paving	TBC	Non-Slip			
	▨	HS-200	Concrete Footpath	110mm concrete, 25MPa with SL72 mesh (typ). Refer Eng.		to bar chairs, and 50mm compacted crushed rock base, class 2	tone to match architectural elements		Broom
	▨	HS-201	Concrete Drive (decorative saw cuts)	150mm concrete, 32MPa with SL72 mesh (typ). Refer Eng.		to bar chairs, and 50mm compacted crushed rock base, class 2	tone to match architectural elements	saw cuts to depth of 10mm, in running bond pattern 1200 x 900mm	Broom
	▨	HS-211	Hotmix	Asphalt		Suitable for all traffic			

PHOTO	SYMBOL	CODE	DESCRIPTION	Dimensions	Material	Finish	Top Profile	Notes	Supplier
RAISED PLANTERS									
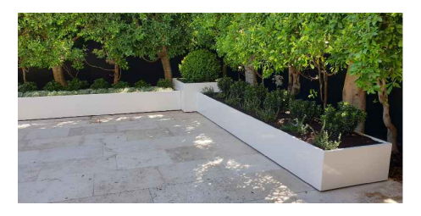	▭	RP-101	Planter Box - type 1		Aluminium - powder coated		35mm	Connect drainage and irrigation	PO Box Designs
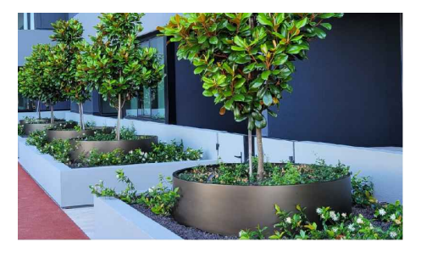	○	RP-403	Tree Riser - type 3 (1.2m dia)	1200mm dia x 600mm H	Aluminium - powder coated	to match architectural elements	50mm	Open base. Refer detail	PO Box Designs

PLANT SCHEDULE SITE (PRELIMINARY)

CODE	BOTANICAL NAME	COMMON NAME	SIZE	MIN. HEIGHT	SIZE (MATURE HXW)	EX/NV, EVG/DEC	QTY
TREES							
ACE DIS	Acer pal. dissectum `Seiryu`	Cutleaf Green Japanese Maple	200L	2m+	4x4m	Ex, Dec	2
ACE PAL	Acer palmatum	Green Leaf Japanese Maple	100L	3m+	4x4m	Ex, Dec	12
ACE CRS	Acer platanoides 'Crimson Sentry'	Crimson Sentry Norway Maple	150L	3m+	7x4m	Ex, Dec	4
ACE AUB	Acer x freemanii 'Autumn Blaze'	Lipstick Maple	100L	3m+	13x10m	Ex, Dec	3
ARB STR	Arbutus unedo	Strawberry Tree	150L	2m+	7x5m	Ex, Evg	1
CED ATL	Cedrus atlantica	Atlas Cedar	100L	1.8m+	30x12m	Ex, Evg	10
CER FOR	Cercis canadensis `Forest Pansy'	Forest Pansy Redbud	100L	2m+	5x5m	Ex, Dec	14
EUC GLO	Eucalyptus globulus	Tasmanian Blue Gum	45L	1.6m+	20x10m	Nv. Evg	2
FRA RAY	Fraxinus oxycarpa `Raywoodii`	Claret Ash	200L	2m+	12x7m	Ex, Dec	9
GLE TRS	Gleditsia triacanthos `Shademaster`	Honey Locust	200L	3m+	11x8m	Ex, Dec	20
LAG IND	Lagerstroemia indica x fauriei 'Natchez'	White Crepe Myrtle	150L	2.5m+	6x4m	Ex, Dec	80
MAL FLO	Malus floribunda	Japanese Crab Apple	100L	2m+	5x5m	Ex, Dec	15
MAL TRI	Malus trilobata	Lebanese Wild Apple	75L	2m+	7x3m	Ex, Dec	12
PAR PER	Parrotia persica	Persian Ironwood	100L	3m+	7x5m	Ex, Dec	5
PIN ITA	Pinus pinea	Italian Stone Pine	800L	4m+	12x8m	Ex, Evg	10
PIN SYL	Pinus sylvestris	Scotch Pine	100L	1.6m+	25x7m	Ex, Evg	5
PYR NIV	Pyrus nivalis	Snow Pear	100L	3m+	8x5m	Ex, Dec	74
QUE PAL	Quercus palustris	Pin Oak	200L	3m+	15x8m	Ex, Dec	47
ULM GLB	Ulmus glabra `Lutescens`	Golden Elm	200L	4m+	10x12m	Ex, Dec	3
ULM TOD	Ulmus parvifolia 'Todd'	Chinese Elm	200L	3m+	10x11m	Ex, Dec	3

CODE	BOTANICAL NAME	COMMON NAME	SIZE	SPACING	SIZE (MATURE HXW)	NV/EX, EVG/DEC	QTY
SHRUBS							
CHO TER	Choisya ternata	Mexican Orange	20cm Pot	900mm	1.5x2m	Ex, Evg	20
HYD ALB	Hydrangea macrophylla 'Alba'	Mophead Hydrangea	20cm Pot	1000mm	1.4x1.6m	Ex, Dec	71
HYD QUE	Hydrangea quercifolia	Oakleaf Hydrangea	20cm Pot	1000mm	1.8x2.5m	Ex, Dec	56
ROS ICE	Rosa 'Iceberg'	White Bush Rose	20cm Pot	1.2m	1.2x0.9m	Ex, Dec	12
RUG ALB	Rosa rugosa 'Alba'	White Rugosa Rose	20cm Pot	1.2m	1.5x1.2m	Ex, Dec	84
VIB TIN	Viburnum tinus	Laurustinus Viburnum	30cm Pot	As Shown	3x2m	Ex, Evg	467
MASS PLANTINGS							
GAU BDW	Gaura lindheimeri 'Belleza White'	Butterfly Bush	14cm Pot	400mm	0.5x0.5m	Ex, Evg	779
LOR PLG	Loropetalum chinense `Plum Gorgeous`	Plum Fringe Flower	14cm Pot	700mm	1.5x2m	Ex, Evg	175
RHA ORM	Rhaphiolepis indica `Oriental Pearl`	Mass White Indian Hawthorn	20cm Pot	600mm	0.8x1m	Ex, Evg	1,825
GROUND COVERS							
ERI KAR	Erigeron karvinskianus	Seaside Daisy	14cm Pot	300mm	0.5x1m	Ex, Evg	116
HED CAN	Hedera canariensis	Canary Island Ivy	14cm Pot	800mm	0.5x8m	Ex, Evg	2,375
MYO PAR	Myoporum parvifolium	Trailing Myoporum	14cm Pot	800mm	0.2x1.5m	Nv, Evg	1,334
ROS BLU	Rosmarinus 'Blue Lagoon'	Semi-Prostrate Rosemary	14cm Pot	700mm	1x1m	Ex, Evg	4,886
TRA ASI	Trachelospermum asiaticum	Asian Jasmine	14cm Pot	600mm	0.2x3m	Ex, Evg	683
TRA JAS	Trachelospermum jasminoides *remove trellis frames if present. Pin vines to ground	Star Jasmine	14cm Pot	700mm	0.5x2m	Ex, Evg	2,249

PAUL BANGAY
THE STUDIO

54 GWYNNE STREET CREMORNE
VIC 3121 AUSTRALIA | T +61 3 9070 6050
PRB DESIGN PTY LTD | ABN 20 066 291 076
PAULBANGAY.COM

ISSUE DATE 6th May 2026
PROJECT STATUS CONCEPT DESIGN
SCALE NTS @ A0 PAGE 16 of 18
ARCHITECT STEWART ARCHITECTURE
LANDSCAPE ARCHITECT EH CHECKED BY PB
CLIENT BLOC
PROJECT FORESTRY PLACE, YARRALUMLA ACT
SITE INSPECTED 23/03/2026
AREA/ LEVEL SITE JOB NO. 260225
SHEET NO. L200 ISSUE A

SCHEDULES & MATERIAL SELECTIONS
DRAWING TITLE:

[NOT FOR CONSTRUCTION]

VERIFY ALL DIMENSIONS ON SITE PRIOR TO COMMENCEMENT OF WORKS/ ORDERING. DO NOT SCALE FROM REPRODUCED/ COPIED DRAWINGS. USE ORIGINAL PLOT ONLY.
CONTRACTOR AND CLIENT TO OBTAIN ALL PERMITS/ APPROVALS. STRUCTURAL ELEMENTS DETAILED BY PRB DESIGN FOR AESTHETIC REFERENCE ONLY.
CHECK ALL DRAWINGS, QUANTITIES AND MATERIALS; REPORT ANY DISCREPANCIES/ ERRORS TO PRB DESIGN.

major works (preliminary)
forestry place

PAUL BANGAY STUDIO

PLANTING PALETTE - MASTER PLAN

PHOTO	SYMBOL	CODE	BOTANICAL NAME	SIZE	MIN. HEIGHT	SIZE (MATURE HXW)	EX/NV, EVG/DEC
TREES							
		ACE DIS	Acer pal. dissectum \`Seiryu\`	200L	2m+	4x4m	Ex, Dec
		ACE PAL	Acer palmatum	100L	3m+	4x4m	Ex, Dec
		ACE ATR	Acer palmatum \`Atropurpureum'	100L	2m+	4x3m	Ex, Dec
		ACE CRS	Acer platanoides 'Crimson Sentry'	150L	3m+	7x4m	Ex, Dec
		ACE SUG	Acer saccharum	100L	3m+	8x10m	Ex, Dec
		ACE AUB	Acer x freemanii 'Autumn Blaze'	100L	3m+	13x10m	Ex, Dec
		BET TRP	Betula nigra \`Tropical\`	75L	3m+	15x6m	Ex, Dec
		BET MWH	Betula pendula \`Moss White'	100L	3m+	10x3m	Ex, Dec
		CER FOR	Cercis canadensis \`Forest Pansy'	100L	2m+	5x5m	Ex, Dec
		GIN BIL	Ginkgo biloba (male)	200L	3m+	9x5m	Ex, Dec
		GLE TRI	Gleditsia triacanthos \`Sunburst\`	200L	3m+	8x8m	Ex, Dec
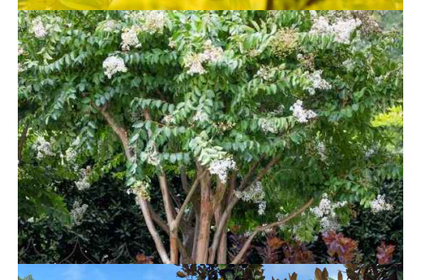		LAG IND	Lagerstroemia indica x fauriei 'Natchez'	150L	2.5m+	6x4m	Ex, Dec
		MAG EXM	Magnolia grandiflora \`Exmouth'	300L	4m+	12x6m	Ex, Evg
		MAL FLO	Malus floribunda	100L	2m+	5x5m	Ex, Dec
		MAL TRI	Malus trilobata	75L	2m+	7x3m	Ex, Dec
		PAR PER	Parrotia persica	100L	3m+	7x5m	Ex, Dec
		PLA BLO	Platanus x acerifolia \`Bloodgood\`	100L	3m+	14x10m	Ex, Dec
		PYR CHA	Pyrus calleryana \`Chanticleer'	100L	3m+	10x5m	Ex, Dec
		QUE PAL	Quercus palustris	200L	3m+	15x8m	Ex, Dec
		ULM GLB	Ulmus glabra \`Lutescens\`	200L	4m+	10x12m	Ex, Dec
		ULM PAR	Ulmus parvifolia	200L	4m+	13x10m	Ex, Dec

PHOTO	SYMBOL	CODE	BOTANICAL NAME	SIZE	SPACING	SIZE (MATURE HXW)	NV/EX, EVG/DEC
SHRUBS							
		BUX J10	Buxus microphylla japonica	1000mm dia.	As Shown	0.8x1m	Ex, Evg
		CAM DEB	Camellia japonica \`Debbie\`	30cm Pot	1000mm	4x3m	Ex, Evg
		CAM SET	Camellia sasanqua \`Setsugekka\`	30cm Pot	1000mm	3x3m	Ex, Evg
		CHO TER	Choisya ternata	20cm Pot	900mm	1.5x2m	Ex, Evg
		ESC IVE	Escallonia x iveyi	20cm Pot	500mm	2x2m	Ex, Evg
		GAU BWH	Gaura lindheimeri 'Belleza White'	14cm Pot	500mm	0.5x0.5m	Ex, Dec
		HYD ALB	Hydrangea macrophylla 'Alba'	20cm Pot	1000mm	1.4x1.6m	Ex, Dec
		HYD PAN	Hydrangea paniculata	25cm Pot	900mm	1.2x1.2m	Ex, Dec
		HYD QUE	Hydrangea quercifolia	20cm Pot	1000mm	1.8x2.5m	Ex, Dec
		LAV ANG	Lavandula angustifolia	14cm Pot	600mm	0.6x0.6m	Ex, Evg
		LAV DEN	Lavandula dentata	14cm Pot	800mm	1x1.2m	Ex, Evg
		LOR PLG	Loropetalum chinense \`Plum Gorgeous\`	20cm Pot	700mm	1.5x2m	Ex, Evg
		RHA ORI	Rhaphiolepis indica \`Oriental Pearl\`	25cm Pot	600mm	0.8x1m	Ex, Evg
		ROS ICE	Rosa 'Iceberg'	20cm Pot	1.2m	1.2x0.9m	Ex, Dec
		RUG ALB	Rosa rugosa 'Alba'	20cm Pot	1.2m	1.5x1.2m	Ex, Dec
		RUG RUG	Rosa rugosa 'Rugspin'	20cm Pot	1.2m	1.2x0.9m	Ex, Dec
		SAL WAV	Salvia \`Waverly\`	14cm Pot	900mm	1.2x1.2m	Ex, Dec
		SAL LEU	Salvia leucantha 'Santa Barbara'	14cm Pot	700mm	0.9x1m	Ex, Dec
		VIB ODO	Viburnum odoratissimum	30cm Pot	As Shown	4x4m	Ex, Evg
		VIB TIN	Viburnum tinus	30cm Pot	As Shown	3x2m	Ex, Evg
CLIMBERS							
		FIC PUM	Ficus pumila	14cm Pot	1000mm	climbs to 6m	Ex, Evg
		PAR TRI	Parthenocissus tricuspidata	20cm Pot	1000mm	climbs to 15m	Ex, Dec
		ROS PDR	Rosa \`Pierre de Ronsard\`	20cm Pot	As Shown to Trellis/ Wire	climbs to 3m	Ex, Dec
		VIT COI	Vitis coignetiae	25cm Pot	As Shown to Trellis/ Wire	climbs to 15m	Ex, Dec
		WIS SIP	Wisteria sinensis	25cm Pot	As Shown to Trellis/ Wire	climbs to 8m	Ex, Dec

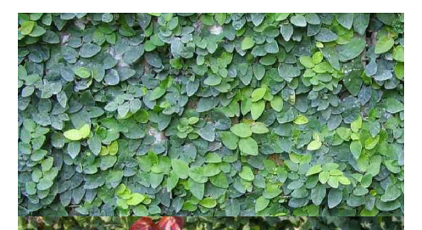		FIC PUM	Ficus pumila	14cm Pot	1000mm	climbs to 6m	Ex, Evg
		PAR TRI	Parthenocissus tricuspidata	20cm Pot	1000mm	climbs to 15m	Ex, Dec
		ROS PDR	Rosa \`Pierre de Ronsard\`	20cm Pot	As Shown to Trellis/ Wire	climbs to 3m	Ex, Dec
		VIT COI	Vitis coignetiae	25cm Pot	As Shown to Trellis/ Wire	climbs to 15m	Ex, Dec
		WIS SIP	Wisteria sinensis	25cm Pot	As Shown to Trellis/ Wire	climbs to 8m	Ex, Dec

GRASSES							
		MIS KLE	Miscanthus sinensis 'Kleine Fontaine'	14cm Pot	800mm	1.2x1m	Ex, Dec
HEDGES							
		BUX JPH	Buxus microphylla japonica	20cm Pot	300mm	0.4x0.4m	Ex, Evg
		LAU NBL	Laurus nobilis 'Miles Choice'	40cm (H 1.5m+)	1000mm	4x1m	Ex, Evg
		PRU LUS	Prunus lusitanica	40cm (H 1.2m+)	1000mm	5x3m	Ex, Evg

PHOTO	SYMBOL	CODE	BOTANICAL NAME	SIZE	SPACING	SIZE (MATURE HXW)	NV/EX, EVG/DEC
GROUND COVERS							
		DIC REP	Dichondra repens	14cm Pot	250mm	0.1x1m	Nv, Evg
		ERI KAR	Erigeron karvinskianus	14cm Pot	300mm	0.5x1m	Ex, Evg
		HED CAN	Hedera canariensis	14cm Pot	800mm	0.5x8m	Ex, Evg
		ROS BLU	Rosmarinus 'Blue Lagoon'	14cm Pot	700mm	1x1m	Ex, Evg
		ROS PRO	Rosmarinus officinalis \`Prostratus\`	14cm Pot	500mm	0.5x2.5m	Ex, Evg
		SEN SED	Senecio serpens 'Dwarf'	14cm Pot	400mm	0.1x0.6m	Ex, Evg
		STA LAN	Stachys lanata	14cm Pot	500mm	0.2x1m	Ex, Evg
		TRA JAS	Trachelospermum jasminoides	14cm Pot	700mm	0.5x2m	Ex, Evg

PAUL BANGAY
THE STUDIO

54 GWYNNE STREET CREMORNE
VIC 3121 AUSTRALIA | T +61 3 9070 6050
PRB DESIGN PTY LTD | ABN 20 066 291 076
PAULBANGAY.COM

ISSUE DATE 6th May 2026
PROJECT STATUS CONCEPT DESIGN
SCALE NTS @ A0 PAGE 17 of 18
ARCHITECT STEWART ARCHITECTURE
LANDSCAPE ARCHITECT EH CHECKED BY PB
CLIENT BLOC
PROJECT FORESTRY PLACE, YARRALUMLA ACT
SITE INSPECTED 23/03/2026
SITE AREA/ LEVEL 260225 JOB NO.
L350 SHEET NO. A ISSUE

PLANTING PALETTE
DRAWING TITLE:

[NOT FOR CONSTRUCTION]

VERIFY ALL DIMENSIONS ON SITE PRIOR TO COMMENCEMENT OF WORKS/ ORDERING. DO NOT SCALE FROM REPRODUCED/ COPIED DRAWINGS, USE ORIGINAL PLOT ONLY.
CONTRACTOR AND CLIENT TO OBTAIN ALL PERMITS/ APPROVALS. STRUCTURAL ELEMENTS DETAILED BY PRB DESIGN FOR AESTHETIC REFERENCE ONLY.
CHECK ALL DRAWINGS, QUANTITIES AND MATERIALS; REPORT ANY DISCREPANCIES/ ERRORS TO PRB DESIGN.

LANDSCAPE WORKS CERTIFICATION

PRB Design requests that throughout, and upon completion of landscape works, Landscape Architect certification of works be facilitated. Contractor shall also be asked to certify that all landscape works have been completed in accordance with the approved drawings, permits, Australian Standards and good industry practice.

INSPECTIONS: Regular inspections or review by Landscape Architect are required throughout the construction process. Contractor shall provide photographic evidence (at a minimum) of Witness Points noted below. Failure to do so will result in uncertified works, which client may request to be rectified at contractor's expense.

MARKETING TERMS: Usage of the Paul Bangay / PRB Design Pty Ltd. name and associated branding for marketing purposes is conditional on Landscape Works Certification, and specific involvement of Landscape Architect.

NOVATION TERMS: Contractor/ Entity to promptly issue sub-consultancy agreement to PRB Design, outlining commitment to landscape works certification (as outlined below). If this is not forth coming, PRB Design shall notify client that we have not been engaged and cannot certify the completed works - likely holding up their plan sealing/occupancy if certification is required by the approval, and removing their right to use the Bangay name and branding in marketing materials.

PRE-COMMENCEMENT MEETING: Landscape Contractor to give notice to allow PRB Design Landscape Architect to attend pre-commencement meeting, either physically or remotely.

HOLD POINTS & WITNESS POINTS

DEFINITIONS

Hold point: A mandatory verification position in the contract beyond which work cannot proceed without designated authorisation.

Witness point: A nominated position, in the different stages of the Contract, where the option of attendance may be exercised by the Superintendent, after notification of the requirement.

Non-conformance report (NCR): A mandatory (standard format) submission by the contractor that details the non-conforming work and the contractor's proposed disposition of the non-conformance.

Notice of non-conformance (NNC): Formal instruction to the contractor of product non-conformance to documented requirements. It automatically creates a Hold Point and requires a non-conformance report (NCR) from the contractor.

Corrective action request (CAR): A formal advice/instruction to the contractor requesting action to eliminate the cause of a detected nonconformity.

Disposition (of non-conformity): A remedial action to be taken concerning material, components or product about which a decision has been made. The resolution of a nonconformance. (This should not be confused with Corrective Action.)

HOLD POINTS: Hold points are usually assigned to those critical aspects of the work that cannot be inspected or corrected at a later stage because they will no longer be accessible. Specific hold points to be raised and discussed at pre-commencement meeting. Contractor to refer Superintendent/ Project Manager for details. Note: Hold points shall automatically be created upon issuance of NNC.

PRB recommends using hold points sparingly as each potentially affects project duration and cost.

WITNESS POINTS: Inspection/ Review: To enable certification, give notice so that inspection may be made, (or provide photographic evidence for review to Superintendent and/or Client, and cc: info@paulbangay.com or project LA if known) of the following:

1. Site Preparation
   1.1. general site set out
   1.2. soil/ bed preparation (including soil testing, amelioration, and mounding)
   1.3. site grading
2. Drainage
   2.1. inspection of drainage trenches and pipe runs prior to backfilling
3. Irrigation
   3.1. submit irrigation design for approval prior to commencement of works
   3.2. commissioning test once installed
4. Plant Procurement
   4.1. representative samples of all stock scheduled to establish conformity immediately before the acceptance of tender.
   4.2. plant material at, as close as practical, 100% completion of stocking of species and numbers.
5. Planting
   5.1. set out of plants
   5.2. inspection of excavated holes and planting technique
6. Samples
   6.1. substituted and unspecified materials (e.g. paving, pebble, fences, gates, screens etc.)
7. Shop Drawings
   7.1. review all landscape related shop drawing
8. Concrete Paths, Slabs & Footings
   8.1. concrete sub-base (special note of fill compaction, if applicable)
   8.2. form work, reinforcement (including bar chairs) and jointing in place
9. Structures & Retaining Walls
   9.1. ensure building works inspected by building surveyor and building permit in place
10. Waterproofing
   10.1. evidence of installer's acceptance of the flooring substrate before starting installation
   10.2. membranes after installation and before concealment
   10.3. flood testing, if applicable
11. Completion
   11.1. date of practical completion
   11.2. three monthly intervals during the plant establishment period.
   11.3. end of defects liability period.

CONCEALMENT: If notice of inspection is required for parts of the works that are to be concealed, give notice when the inspection can be made before concealment. Always provide photographic evidence for review prior to concealment.

CONTRACTOR'S ROLE: The contractor is responsible for satisfying the documented contract requirements and planning, developing and maintaining a system assuring the detection of non-conformances and control of their resolution. Issue photographic evidence for all Witness Points.

The issue of a Non-Conformance Report or a Notice of Non-Conformance automatically creates a Hold point. Contractor shall also be asked to self-certify that all landscape works have been completed in accordance with the approved drawings, permits, Australian Standards and good industry practice.

PLANT PROCUREMENT

PRB Design prioritises sourcing all plants and ornaments for our projects in-house. This approach ensures the highest quality stock and allows our office to carefully oversee all selections, substitutions and deliveries.

Upon request from the Superintendent or Client, the Contractor may be asked to provide a value-engineered supply quote. This is acceptable; however, the Contractor must seek approval for plant stock prior to tender acceptance, and delivery. Photographic samples should be provided to the Superintendent or Client and cc: info@paulbangay.com

PHOTOGRAPHIC RECORDS: Requirement: Submit photographic records as follows:
- Rates:
. For more than 100 plants: Submit 1%.
. For less than 100 plants: Submit 1 sample.
- Plant species:
. All palm species.
. All 100L + plants.
. All 'specimen' plant species.

Identification: Submit photographs as follows:
- In colour.
- With a clearly identifiable scale reference located in the same plane as the plant stem or trunk.
- Labelled with plant species name.

Clarity: Sufficient to be able to ascertain the species, size and quality of a single specimen of the subject plant.

Refer to PRB Construction Specifications chapter *0255b Landscape - Plant Procurement* for more information.

IMPORTANT

IFT AND IFC PLANS ARE TO BE READ IN CONJUNCTION WITH THE ACCOMPANYING ***PRB DESIGN LANDSCAPE SPECIFICATIONS***.

BASED ON NATSPEC, THIS AUXILIARY A4 REPORT OUTLINES PREFERRED AND BEST PRACTICE PROCEDURES FOR:

0131 Preliminaries
0171 General requirements
0172b Environmental management
0181 Adhesives, sealants and fasteners
0183b Metals and prefinishes
184 Termite management
00185 Timber products, finishes and treatment
0191 Sundry items
0195p TACTILE SYSTEMS TGSI and stair nosing
0201 Demolition
0221 Site preparation
0222 Earthwork
0223 Service trenching
0224 Stormwater - site
0241 Landscape – walling and edging
0242b Landscape – fences and barriers
0243 Landscape – water features
0251 Landscape – soils
0252 Landscape – natural grass surfaces
0253 Landscape – planting
0254 Irrigation
0255b Landscape – plant procurement
0256b Landscape – establishment
0259 Landscape – maintenance
0261 Landscape – furniture and fixtures
0262 External sports and playground surfacing
0271b Pavement base and subbase
0272 Asphalt
0273 Sprayed bituminous surfacing
0274b Concrete pavement
0275 Paving – mortar and adhesive bed
0276 Paving – sand bed
0277 Pavement ancillaries
0278 Granular surfaces
0279 Paving – on pedestals
0310 Concrete – combined
0312 Concrete reinforcement
0315 Concrete finishes
0321 Precast concrete
0331b Brick and block construction
0332b Stone masonry
0333 Stone repair
0342 Light steel framing
0344b Steel – hot-dip galvanized coatings
0345b Steel – protective paint coatings
0382 Light timber framing
0383 Decking, sheet and panel flooring
0411b Waterproofing – external and tanking
0421 Roofing – combined
0431 Cladding – combined
0433 Stone cladding
0611 Rendering and plastering
0612b Cementitious toppings
0632 Stone and terrazzo tiling
0641 Applied wall finishes
0651 Resilient finishes
0671b Painting
0673 Powder coatings
0702 Mechanical design and install
0802 Hydraulic design and install
0902 Electrical design and install

NOTE: Chapters not specifically relevant to this project will typically be omitted from the report

① LANDSCAPE CONSTRUCTION SPECIFICATIONS
1:1 TD-PR-01

CONSTRUCTION NOTES

GENERAL

TIMBER FENCES: All nondescript fences (i.e. paling boundary fences) to be painted 'Bangay Green' consisting of 1 part Brunswick Green (33797), 1 Part Black (SG6G9) - 50/50 mix.

WALLS: All walls (retaining, freestanding, etc.) not exempt from planning regulations and NCC to be specified by Engineer and approved by Local Council.

FOOTINGS: For footings in close proximity to shrubs, creepers and ground covers, allow at least 300mm of topsoil over footings. Footings adjacent to proposed tree plantings require 700mm of topsoil cover. This is to ensure adequate soil exists for plantings adjacent to structures (i.e. walls, pergolas, decks, fences etc.), all footings to be set below finished ground level (GL).

STONE CLADDING:
- Provide mechanical fixing where cladding height exceeds 3 m or stone weight exceeds 32 kg/m².
- Adhesive-only fixing permitted only where substrate capacity is compliant and stone weight is within limits.
- Substrates to be clean, sound, and prepared (remove laitance, release agents, contaminants).
- Blockwork/brick substrates to be rendered and core-filled prior to fixing cladding.
- Fibre-cement sheeting must be manufacturer-approved for tile loads; fixings must penetrate into framing.
- Use C2 polymer-modified or R-class epoxy adhesives where adhesive fixing is permitted.
- Ensure full adhesive contact to stone backs; remove excess resin or contaminants.
- Provide stainless steel support angles (min. 2 mm thick) where mechanical fixing is required.
- Coordinate anchor locations with structural substrate; anchors must not fix into sheeting alone.
- Maintain consistent joint alignment; stack stone installed with butt joints (no grout).
- Protect waterproofing membranes; do not bond cladding or fixings directly to membrane.
- All fixing systems and substrate suitability to be verified by a qualified engineer where required.

PLANTING WORKS

PLANTING REQUIREMENT: Make sure the general appearance and presentation of the landscape and the quality of plant material at the date of practical completion is maintained for the planting establishment period.

EXISTING PLANT MATERIAL: Maintain existing planting and grass within the landscape contract area as documented for the matching classifications of new grassland or planting.

PLANT REPLACEMENT: Replace failed, dead and/or damaged plants at maximum 3 weekly intervals as necessary throughout the plant establishment period.

PLANT ESTABLISHMENT PERIOD: 13 weeks typical for domestic projects, 52 weeks for commercial (date of practical completion to the end of the defects liability period)

INSECT AND DISEASE CONTROL: Responsibility for insect and disease control: Contractor

Period for treatment: Until the problem has been eliminated.

STAKES AND TIES: Generally: If plants are not self-supporting or if stakes are damaged, stake or re-stake the plants as

follows:

- Drive three hardwood stakes placed diagonally with the first stake on the opposite side to the prevailing winds.
- Removal: If plants are robust with well-developed systems and no longer require support, remove stakes and ties.

ESTABLISHMENT: Adhere to PRB Construction Specifications chapter *0256b Landscape - Establishment* and *0259 Landscape - Maintenance*.

GENERAL NOTES
- Tree protection measures shall comply with AS 4970:2025 – Protection of Trees on Development Sites.
- The Nominal Root Zone (NRZ) radius is calculated as:
  NRZ=DSH\times 12- where DBH = Diameter at Standard Height (1.4 m above ground).
- The Structural Root Zone (SRZ) must also be determined by the project arborist for stability-critical roots.

BARRIER FENCE
- 1.8 m high chain-link or mesh fence, supported by star pickets (with high-vis caps) at max. 2.4 m spacing.
- Fence to be located at NRZ boundary unless otherwise directed by arborist.
- Shade cloth or barrier fabric fixed to fence to restrict access.

SIGNAGE
- Minimum 450 × 300 mm sign fixed to fence at 10 m intervals.
- Text: "TREE PROTECTION ZONE – KEEP OUT".

GROUND TREATMENT
- Apply 75–100 mm depth of coarse organic mulch within fenced area.
- No excavation, trenching, or soil disturbance permitted.
- No storage of materials, chemicals, or vehicles within NRZ.

ENCROACHMENT
- Any proposed works within NRZ require arborist supervision and approval.
- Root pruning must be performed with clean, sharp tools under arborist direction.
- Ground protection mats or bridging required if temporary access is unavoidable.

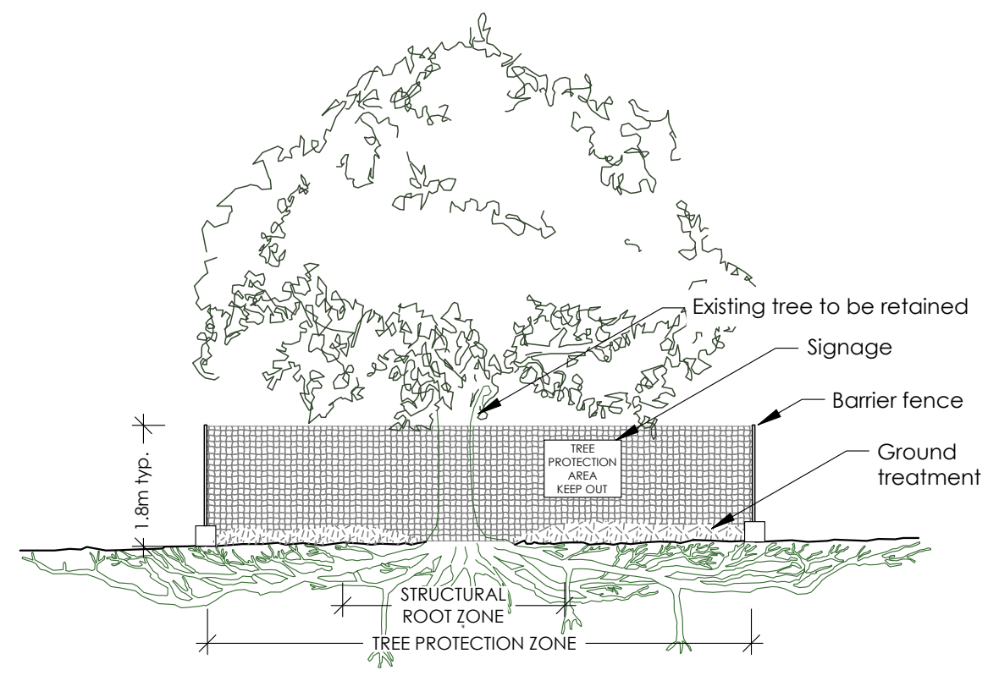

Existing tree to be retained
Signage
Barrier fence
Ground treatment
TREE PROTECTION AREA KEEP OUT
1.8m typ.
STRUCTURAL ROOT ZONE
TREE PROTECTION ZONE

ENCROACHMENT GUIDELINES

The AS 4970:2025 standard provides refined categories for encroachment into the NRZ, which determine the required response:
- Minor Encroachment (≤10% of NRZ and outside the Structural Root Zone or SRZ): Generally low risk, requiring standard protection measures.
- Moderate Encroachment (10–20% of NRZ and outside the SRZ): Requires review and potential mitigation measures by a project arborist to ensure tree viability.
- Major Encroachment (>20% of the NRZ or any intrusion into the SRZ): Triggers a detailed arboricultural assessment and non-destructive root investigation to demonstrate the tree can remain viable. The SRZ is a hard limit, and any intrusion is automatically considered a major impact.

② TREE PROTECTION DETAIL – NOMINAL ROOT ZONE (NRZ)
1:75 TD-PR-100

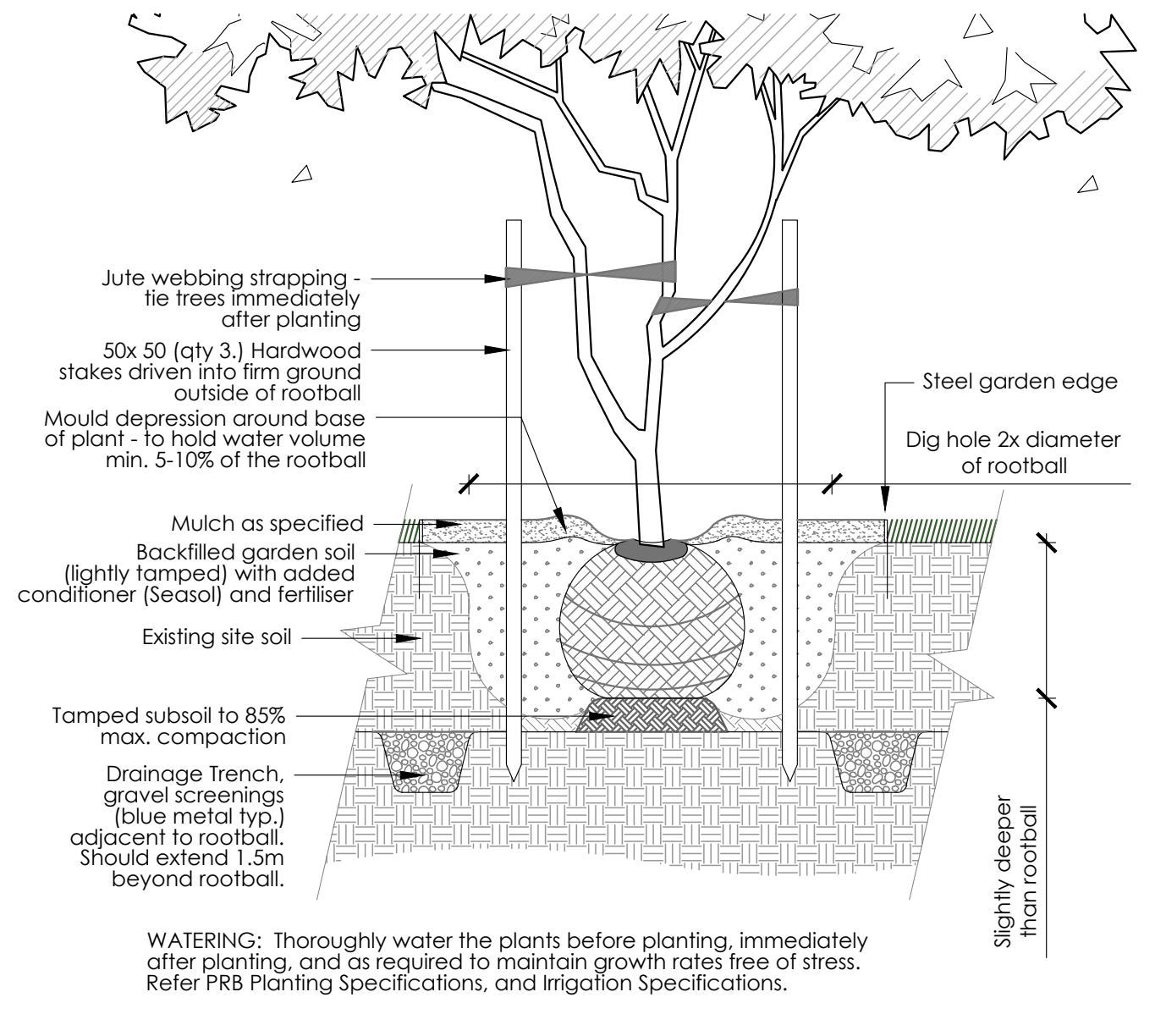

Jute webbing strapping - tie trees immediately after planting
50x 50 (qty 3.) Hardwood stakes driven into firm ground outside of rootball
Mould depression around base of plant - to hold water volume min. 5-10% of the rootball
Steel garden edge
Dig hole 2x diameter of rootball
Mulch as specified
Backfilled garden soil (lightly tamped) with added conditioner (Seasol) and fertiliser
Existing site soil
Tamped subsoil to 85% max. compaction
Drainage Trench, gravel screenings (blue metal typ.) adjacent to rootball. Should extend 1.5m beyond rootball.
Slightly deeper than rootball

WATERING: Thoroughly water the plants before planting, immediately after planting, and as required to maintain growth rates free of stress. Refer PRB Planting Specifications, and Irrigation Specifications.

DRAINAGE: In clay site conditions, heavy clay soils must be ameliorated and drainage made for drainage trenches. Sandy soils may not require any drainage interventions.

③ TREES - OPEN FIELD PLANTINGS
1:25 P3-PL-04

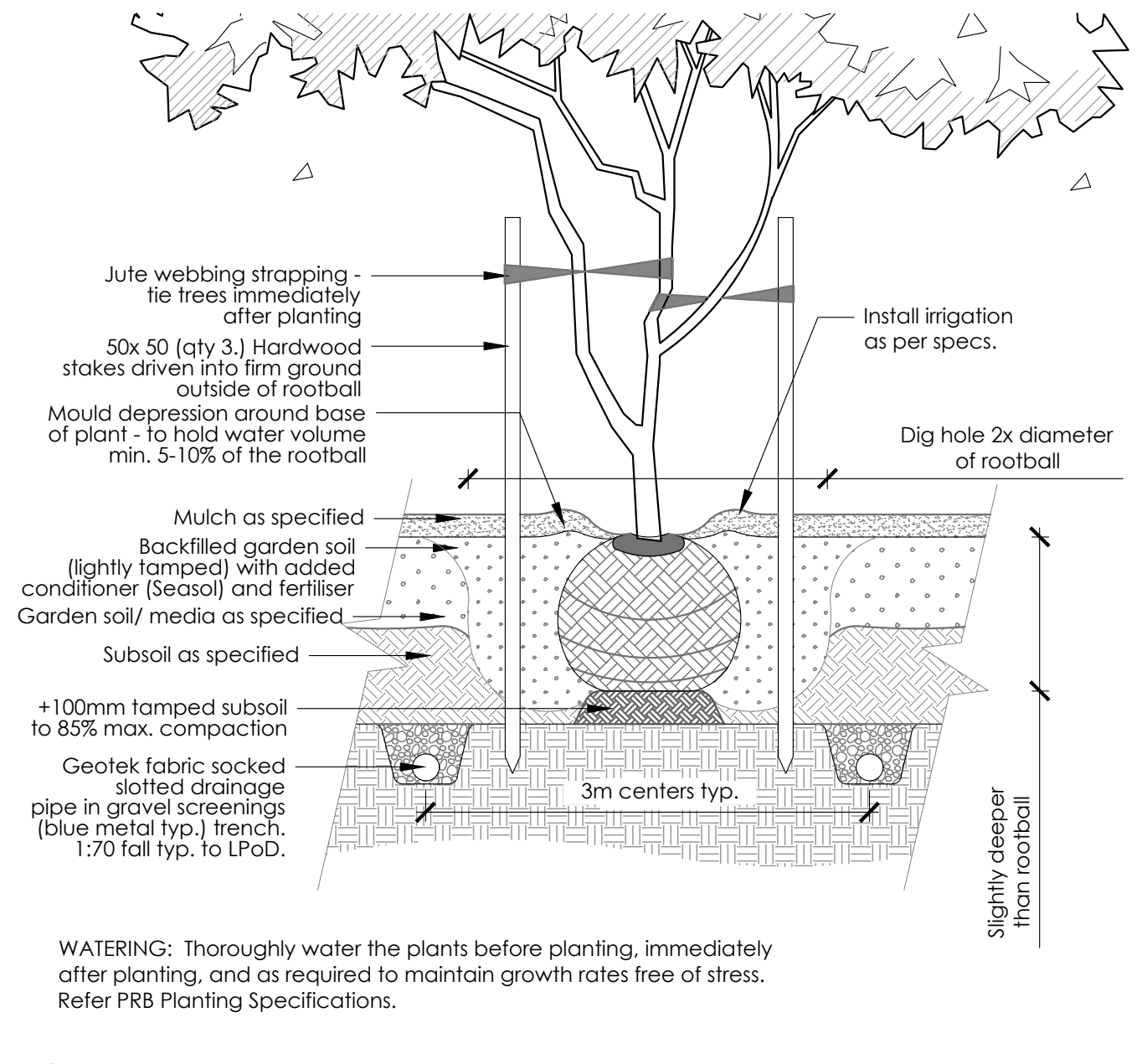

Jute webbing strapping - tie trees immediately after planting
50x 50 (qty 3.) Hardwood stakes driven into firm ground outside of rootball
Mould depression around base of plant - to hold water volume min. 5-10% of the rootball
Install irrigation as per specs.
Dig hole 2x diameter of rootball
Mulch as specified
Backfilled garden soil (lightly tamped) with added conditioner (Seasol) and fertiliser
Garden soil/ media as specified
Subsoil as specified
+100mm tamped subsoil to 85% max. compaction
Geotek fabric socked slotted drainage pipe in gravel screenings (blue metal typ.) trench. 1:70 fall typ. to LPoD.
3m centers typ.
Slightly deeper than rootball

WATERING: Thoroughly water the plants before planting, immediately after planting, and as required to maintain growth rates free of stress. Refer PRB Planting Specifications.

④ TYPICAL TREE PLANTING TO GARDEN BED
1:25 P3-PL-01

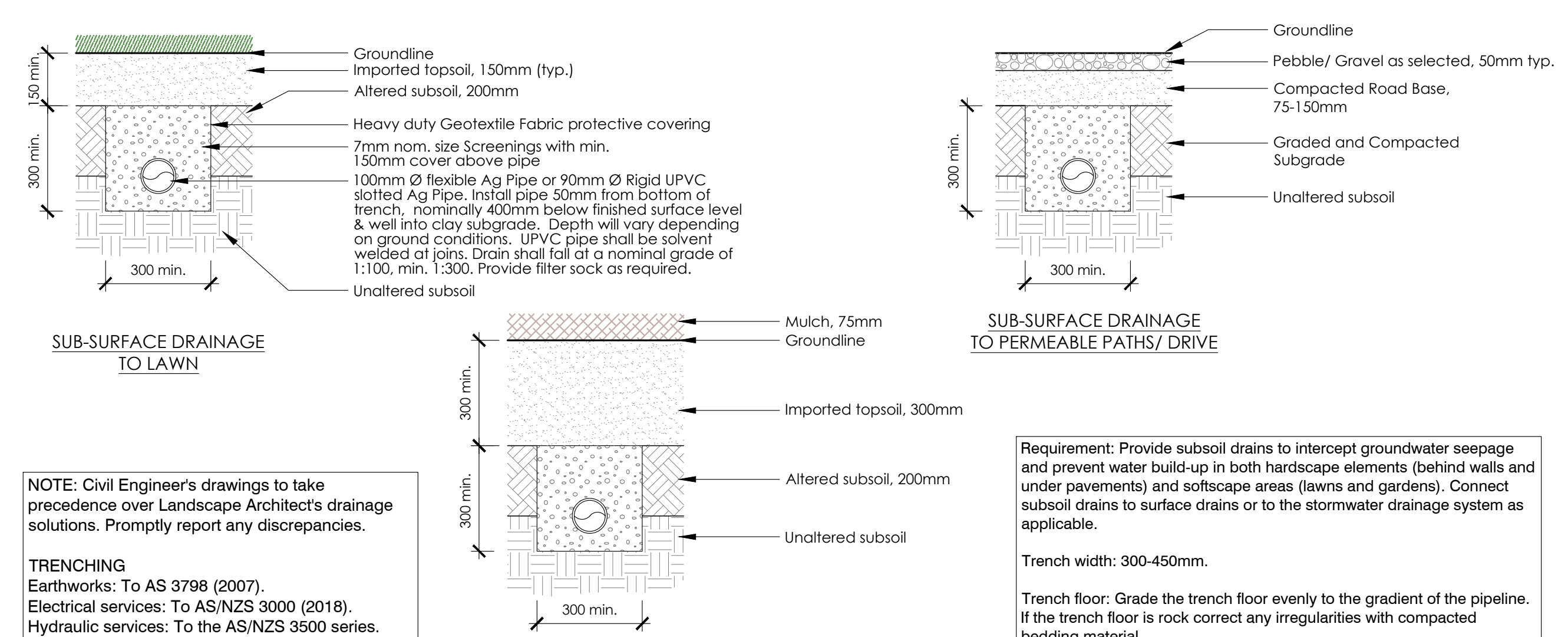

Groundline
Imported topsoil, 150mm (typ.)
Altered subsoil, 200mm
Heavy duty Geotextile Fabric protective covering
Unaltered subsoil
150 min.
300 min.
SUB-SURFACE DRAINAGE TO LAWN
Mulch, 75mm
Imported topsoil, 300mm
Altered subsoil, 200mm
SUB-SURFACE DRAINAGE TO GARDEN
Pebble/ Gravel as selected, 50mm typ.
Compacted Road Base, 75-150mm
Graded and Compacted Subgrade
SUB-SURFACE DRAINAGE TO PERMEABLE PATHS/ DRIVE

7mm nom. size Screenings with min. 150mm cover above pipe. 100mm Ø flexible Ag Pipe or 90mm Ø Rigid UPVC slotted Ag Pipe. Install pipe 50mm from bottom of trench, nominally 400mm below finished surface level & well into clay subgrade. Depth will vary depending on ground conditions. UPVC pipe shall be solvent welded at joins. Drain shall fall at a nominal grade of 1:100, min. 1:300. Provide filter sock as required.

NOTE: Civil Engineer's drawings to take precedence over Landscape Architect's drainage solutions. Promptly report any discrepancies.

TRENCHING
Earthworks: To AS 3798 (2007).
Electrical services: To AS/NZS 3000 (2018).
Hydraulic services: To the AS/NZS 3500 series.
Communication services: To AS/CA S009 (2020).

Requirement: Provide subsoil drains to intercept groundwater seepage and prevent water build-up in both hardscape elements (behind walls and under pavements) and softscape areas (lawns and gardens). Connect subsoil drains to surface drains or to the stormwater drainage system as applicable.

Trench width: 300-450mm.

Trench floor: Grade the trench floor evenly to the gradient of the pipeline. If the trench floor is rock correct any irregularities with compacted bedding material.

Pipe cover: To AS/NZS 3500.3 (2021) clause 6.2.5.

⑤ DRAINAGE TRENCHING
1:15 TD-ST-01

GYPSUM
For (most) clay soils: Add Gypsum to cultivated subsoil to manufacturers specifications. Refer site Soil Test Analysis for confirmation of gypsum treatment suitability. Alternative clay-breaking options may be required.

WATER STORAGE CRYSTALS
Apply to imported topsoil, to manufacturers specifications.

SLOW RELEASE FERTILISER:
Apply to imported topsoil, to manufacturers specifications.

SOIL WETTING AND CONDITIONING
After planting, water-in Season solution (Typ.), to manufacturers specifications.

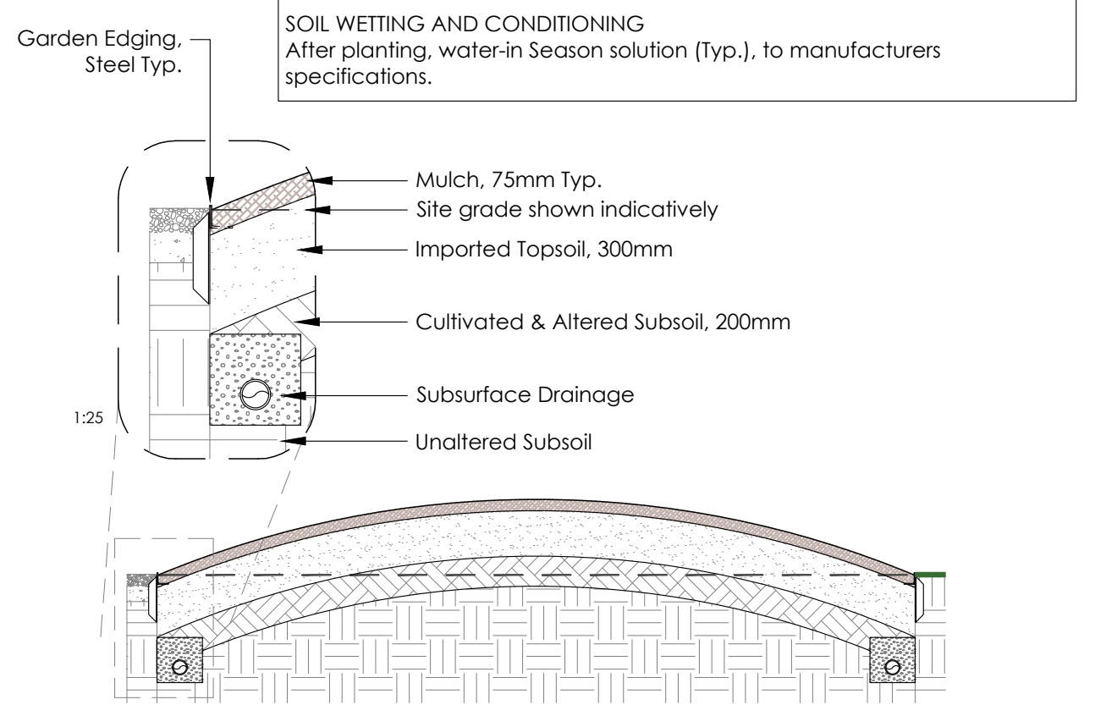

Garden Edging, Steel Typ.
Mulch, 75mm Typ.
Site grade shown indicatively
Imported Topsoil, 300mm
Cultivated & Altered Subsoil, 200mm
Subsurface Drainage
Unaltered Subsoil
1:25

⑥ PLANTING BED - EXCAVATED, TYPICAL
1:50 P3-PL1-01

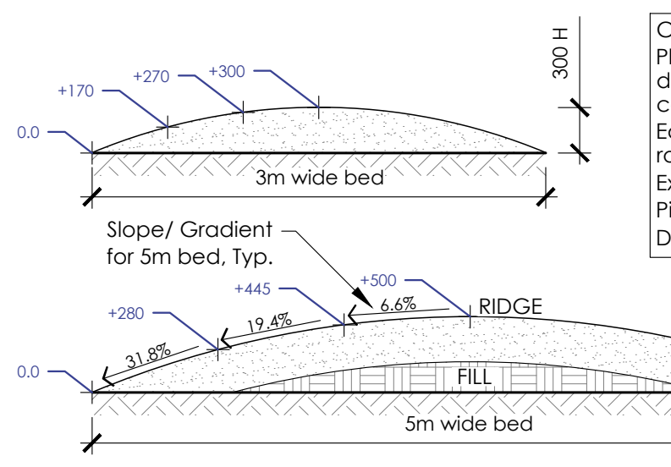

0.0
+170
+270
+300
300 H
3m wide bed
Slope/ Gradient for 5m wide bed
+280
31.8%
RIDGE
FILL
BASE
500 H
5m wide bed

CONSTRUCTION
Placing: Place clean fill in layers approximately 150 mm thick compacted to 85% of the dry density ratio of the surrounding soil tested to AS 1289.5.4.1 (2007). Minimise slumping and further compacting.
Edges: Construct changes in grade over a minimum width of 500 mm to smooth, gradual and rounded profiles with no distinct joint.
Existing trees: Maintain the natural ground level under the canopy.
Pipes, culverts and associated structures: Construct mounding to avoid unbalanced loading.
Drainage: Construct mounds to allow free drainage of surface water and to eliminate ponding.

BERM (MOUND) EARTH TO CENTRE OF BED, AT RATE OF 1:10 (RISE : RUN) TYP.

DO NOT CREATE DEPRESSION AROUND PERIMETER OF BED, CONTINUE BERM RIGHT TO GARDEN EDGE.

VITAL FOR BANGAY PERENNIAL AND COASTAL STYLE GARDEN BEDS FOR IMPROVED DRAINAGE AND VISUAL INTEREST.

⑦ GARDEN BED BERMS
1:50 P3-PL1-02

Note: Retaining walls over 1m high to Engineer's detail.

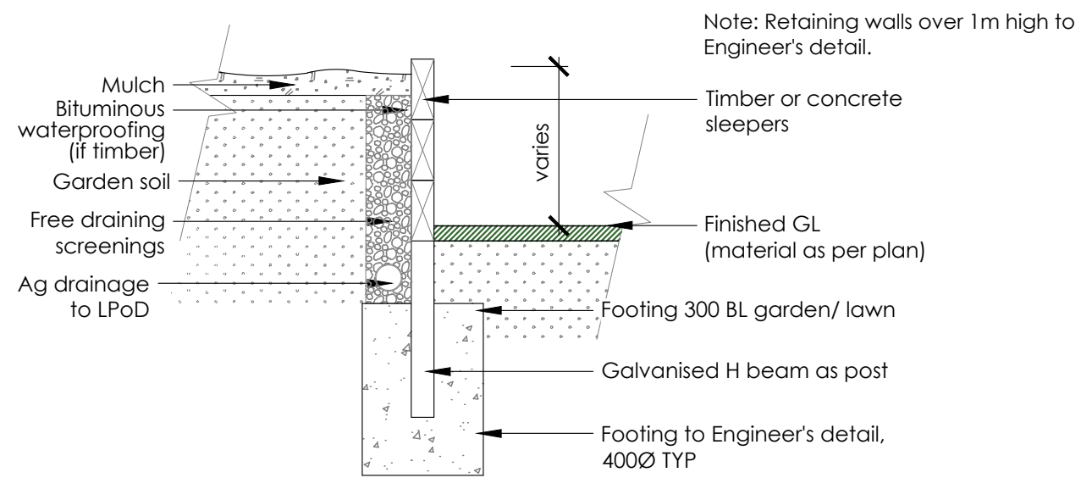

Timber or concrete sleepers
varies
Finished GL
Mulch
Bituminous waterproofing (if timber)
Garden soil
Free draining screenings
Ag drainage to LPoD
Footing 300 BL garden/ lawn
Galvanised H beam as post
Footing to Engineer's detail, 400Ø TYP

⑪ SLEEPER RETAINING WALL, H BEAM - TYPICAL DETAIL
1:25 P3-FE-RET-03

1. CORE-FILLED BLOCKWORK, REINFORECING TO ENGINEER'S DOCUMENTATION
2. APPLIE FINISH AS SCHEDULED, 1-10mm ARRIS TO ALL EXPOSED EDGES
3. GRANULAR FILL (FREE DRAINAING). REFER ENG.
4. WATERPROOF MEMBRANE. 45 DEGREE FILETT TO ACUTE ANGLES
5. EXANSION JOINT. REFER ENG.
6. AG / LINEAR DRAIN TO LPoD
7. MASS RC FOOTING. REFER ENG.

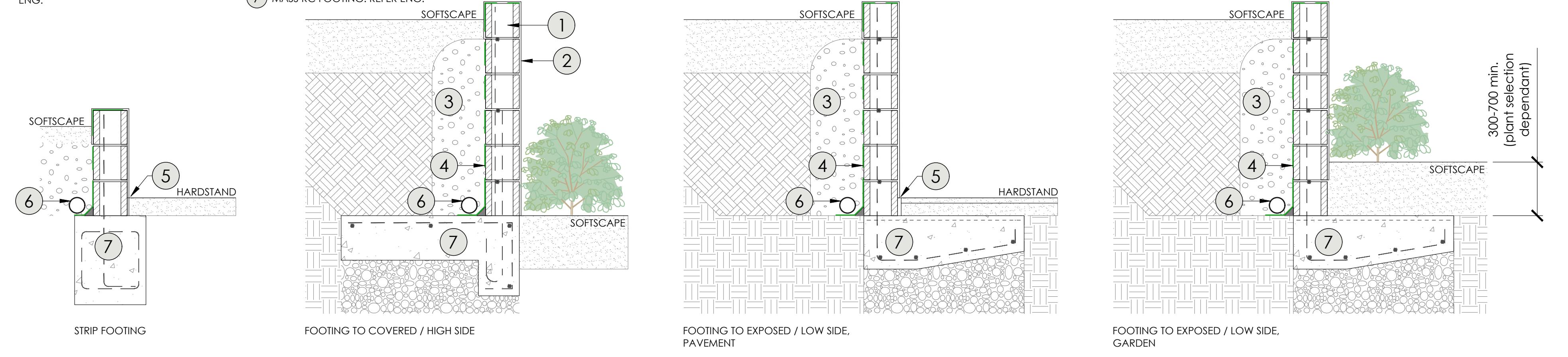

SOFTSCAPE
HARDSTAND
1
2
3
4
5
6
7
300-700 min. (plant selection dependant)
STRIP FOOTING
FOOTING TO COVERED / HIGH SIDE
FOOTING TO EXPOSED / LOW SIDE, PAVEMENT
FOOTING TO EXPOSED / LOW SIDE, GARDEN

⑧ RETAINING WALL CONSTRUCTION STRATEGIES, CONCRETE BLOCK
1:20 TD-FE-BLO-01

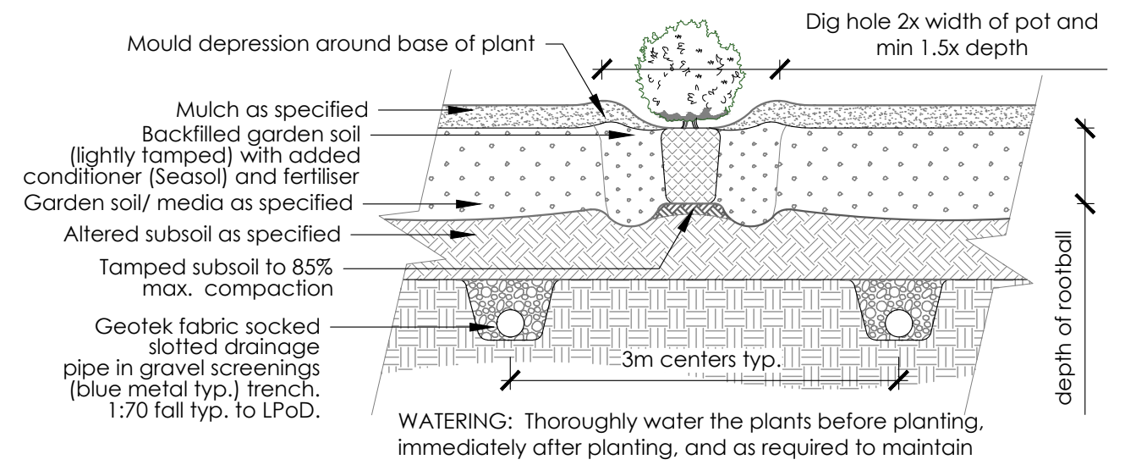

Mould depression around base of plant
Dig hole 2x width of pot and min 1.5x depth
Mulch as specified
Backfilled garden soil (lightly tamped) with added conditioner (Seasol) and fertiliser
Garden soil/ media as specified
Altered subsoil as specified
Tamped subsoil to 85% max. compaction
Geotek fabric socked slotted drainage pipe in gravel screenings (blue metal typ.) trench. 1:70 fall typ. to LPoD.
3m centers typ.
depth of rootball

WATERING: Thoroughly water the plants before planting, immediately after planting, and as required to maintain growth rates free of stress. Refer PRB Planting Specifications.

⑨ TYPICAL SHRUB PLANTING
1:25 P3-PL-02

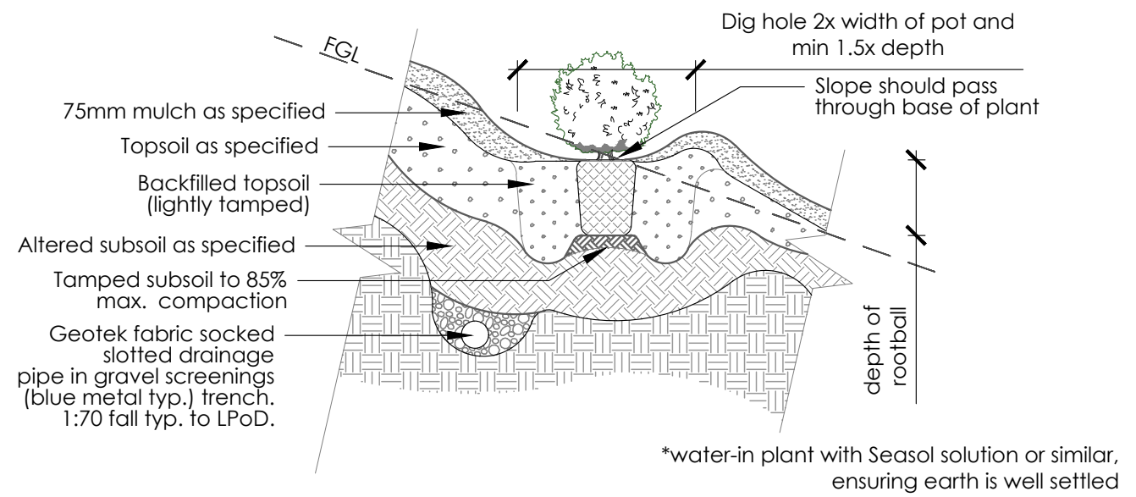

Dig hole 2x width of pot and min 1.5x depth
Slope should pass through base of plant
75mm mulch as specified
Topsoil as specified
Backfilled topsoil (lightly tamped)
Altered subsoil as specified
Tamped subsoil to 85% max. compaction
Geotek fabric socked slotted drainage pipe in gravel screenings (blue metal typ.) trench. 1:70 fall typ. to LPoD.
depth of rootball

*water-in plant with Seasol solution or similar, ensuring earth is well settled

⑩ SHRUB TO SLOPE - MODIFIED SOIL
1:25 P3-PL-03

BANGAY STUDIO PREFERRED IRRIGATION SYSTEMS:

NB: Irrigation design should (where practicable) adhere to these specifications.
If changes are to be proposed (due to cost management or other reasons), contractor is advised to seek both client and Bangay approval.

Trees
- Dripline (consecutive rings x3 (min.) @ 40cm offsets) - for trees of all sizes and life stages, and medium-to-heavy soils. Should extend to width of tree canopy. May be used in tandem with RWS.
- Root Watering System (RWS) - for new plantings, small trees ,and medium-to-heavy soils, dry climates with heavily compacted soil, street medians, and large planters (2 units per tree: Size 45 where rootball is ≤200L, Size 90 where rootball is >200L)
- Multi-Stream Bubblers - for new plantings, small-to-medium trees, and light-to-medium soils

NOTE: Best Practice is for both dripline rings & RWS to large new trees

Large Lawns (10m+ width)
- Pop-up Gear Rotors (e.g Hunter PGP Ultra / Rain Bird 5000 series)

Narrow/ Small Lawns
- Rotator Nozzles (e.g Hunter MP Rotator / Rain Bird R-VAN)

Large Garden Beds
- Rotator Nozzles, pop-up (e.g Hunter MP Rotator / Rain Bird R-VAN)
  - o Option for spray nozzles (lower cost per unit, but up to 30% less water efficient)

  Note: In areas of high wind, rotator nozzles shall be used due to bigger droplet sizes

Narrow/ Small Garden Beds
- Rotator Nozzles or Spray Nozzles, pop-up (e.g Hunter MP Rotator / Pro-Spray / Rain Bird VAN Nozzles)

Screening Hedges
- Driplines (13-14mm) x two(parallel, with plants in centre) with alternating dripper spacing

Pots
- Pressure-Compensating Bubblers
- Dripline (6mm) with 15cm dripper spacing / Dripline (13-14mm) with 30cm dripper spacing in ring(s)

Planter Boxes
- Trees: Root Zone Watering System / Multi-Stream Bubblers / Dripline (consecutive rings)
- Shrubs and Groundcovers: Dripline (13-14mm, 2.0 l/hr) with 30cm dripper spacing.

Vegetable Gardens
- Dripline (13-14mm) with 30cm dripper spacing. 3.0l l/hr (high flow), or Rotator Nozzles (refer client).

Paver Steppers in G/C & 'Green Stairs'
- Dripline (6mm) with 15cm dripper spacing. Weave line between plants and steppers, anchoring frequently with metal pins. Note: Dripline not suitable for lawn.

Final irrigation design by specialist. All other irrigation equipment to be fit for purpose, and of high quality (e.g. isolations valves, quick coupling valves, air valves, irrigation control wire (housed in PVC conduit) & copper grounding plates, decoders, controller (Wi-Fi enabled), pump, automatic filter, water meter, flow sensors, and rain sensor).

RECLAIMED / RECYCLED / NON-POTABLE WATER SOURCE: Use of lilac coloured pipes and components required. Ensure Solenoid Valves are suitable for unfiltered water (e.g. Hunter ICV Filter Sentry™ Valve)

PIPE CLASSIFICATION	DEPTH OF COVER FROM FINISHED GRADE	PREFERRED MATERIAL
Mainline and sub-mains (upstream of valves)	600mm	MDPE piping P.N 12.5
Laterals and sub-laterals (downstream of valves)	350mm	MDPE piping P.N 10
Drip laterals	75mm (below mulch)	proprietary LDPE system and fittings

⑫ PRB IRRIGATION NOTES
1:100 P3-IR-01

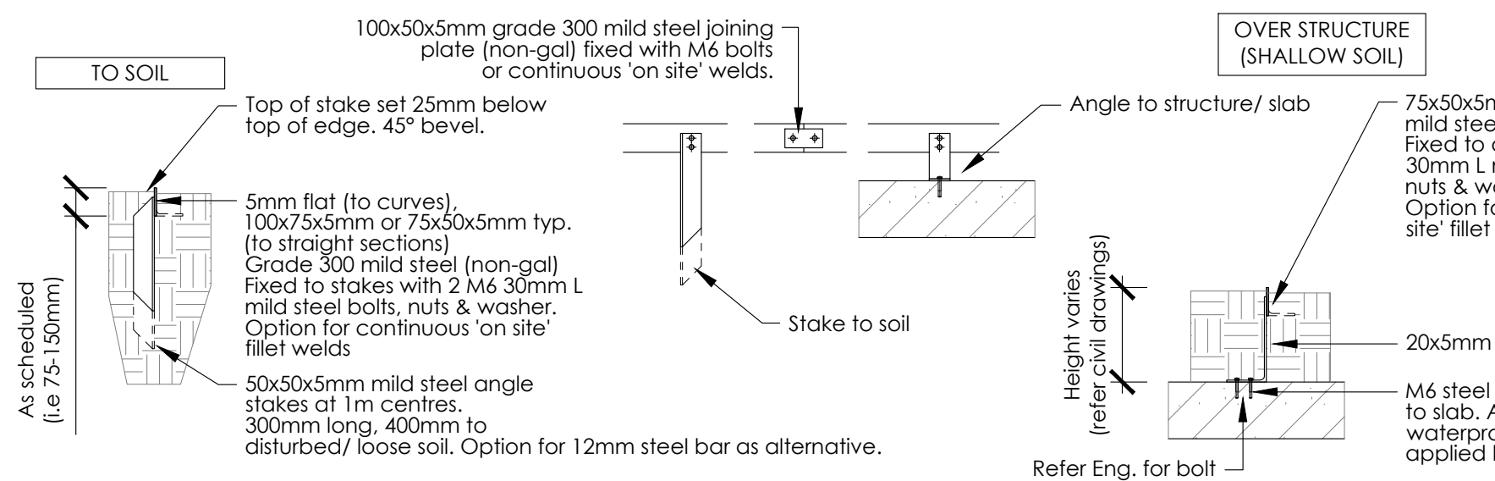

TO SOIL
OVER STRUCTURE (SHALLOW SOIL)
100x50x5mm grade 300 mild steel joining plate (non-gal) fixed with M6 bolts or continuous 'on site' welds.
Top of stake set 25mm below top of edge. 45° bevel.
5mm flat (to curves) 100x75x5mm or 75x50x5mm typ. (to straight sections) Grade 300 mild steel (non-gal) Fixed to stakes with 2 M6 30mm L mild steel bolts, nuts & washer. Option for continuous 'on site' fillet welds.
50x50x5mm mild steel angle stakes at 1m centres, 300mm long, 400mm to structural/ loose soil. Option for 12mm steel bar as alternative.
Stake to soil
Angle to structure/ slab
75x50x5mm grade 300 mild steel (non-gal) Fixed to angle with 2 M6 30mm L mild steel bolts, nuts & washer. Option for continuous 'on site' fillet welds.
20x5mm galvanised angle
M6 steel chemset bolts to slab. Approved waterproofing to be applied by specialist.
Refer Eng. for bolt penetration depth
As scheduled (i.e 75-150mm)
Height varies (refer drawings)

⑬ TYPICAL STEEL EDGING
1:20 P3-GA-02

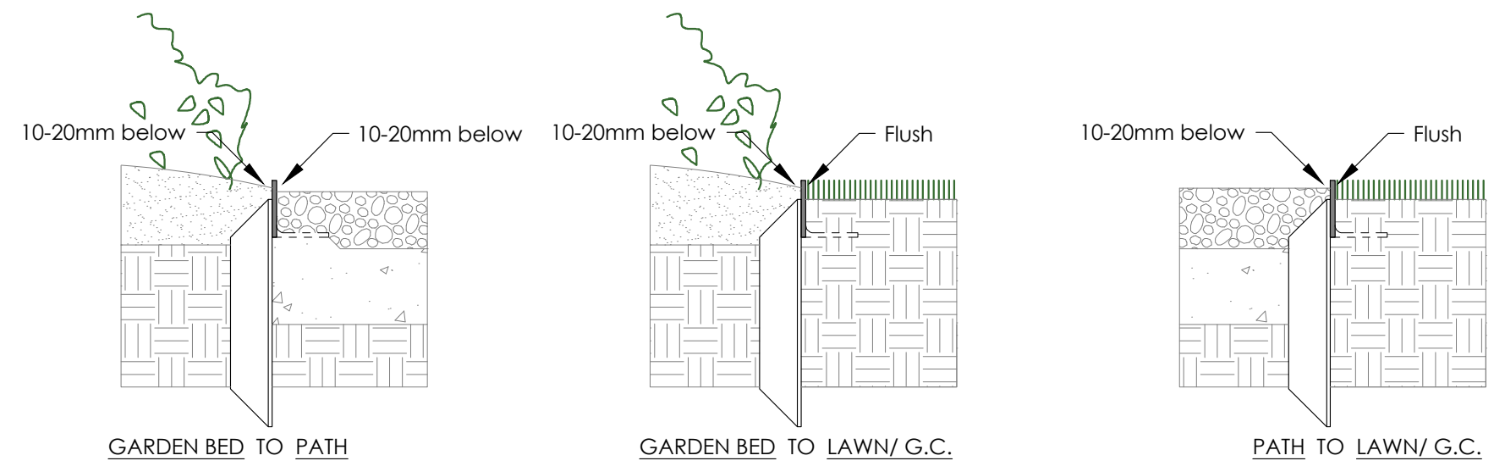

10-20mm below
Flush
GARDEN BED TO PATH
GARDEN BED TO LAWN/ G.C.
PATH TO LAWN/ G.C.

⑭ SURFACE LEVELS TO TYPICAL STEEL EDGING
1:10 P3-GA-04

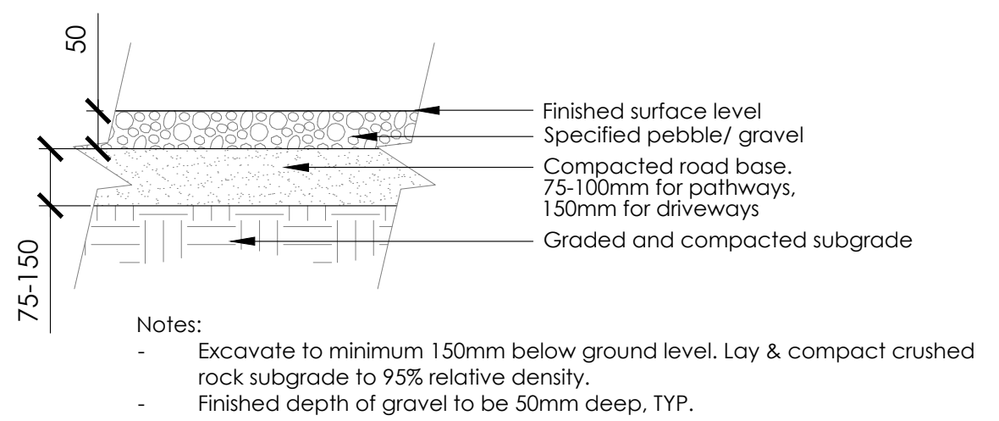

50
75-150
Finished surface level
Specified pebble/ gravel
Compacted road base. 75-100mm for pathways, 150mm for driveways.
Graded and compacted subgrade

Notes:
- Excavate to minimum 150mm below ground level. Lay & compact crushed rock subgrade to 95% relative density.
- Finished depth of gravel to be 30mm deep, TYP.
- Ensure sub-grade drains freely to LPoD, without pooling

⑮ LOOSE PEBBLE/ GRAVEL PATH/ DRIVE
1:10 TD-GR-S2

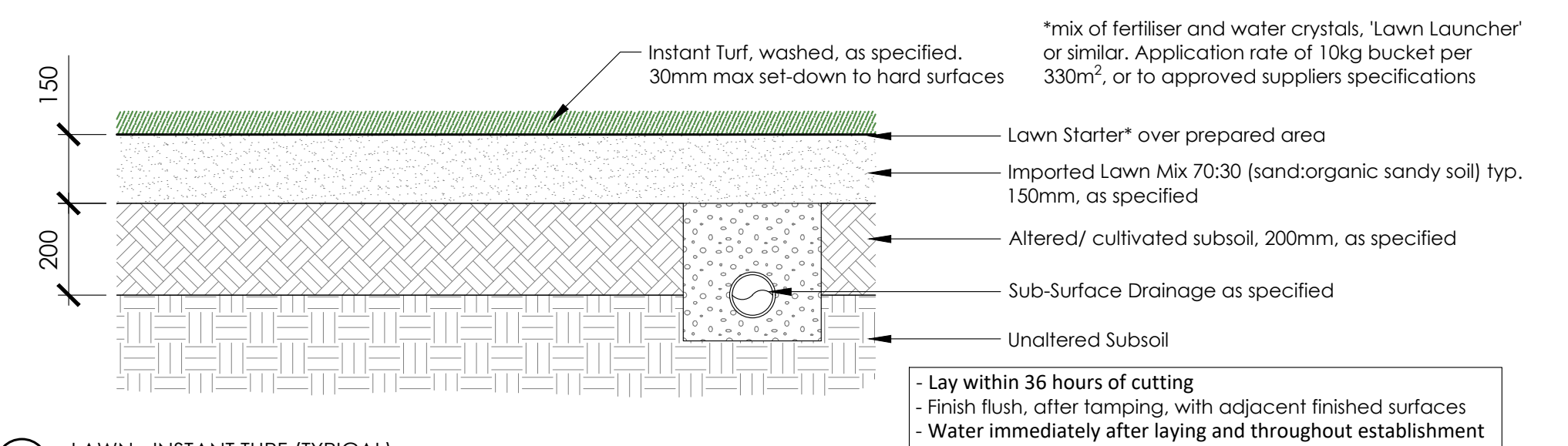

Instant Turf, washed, as specified, 30mm max set-down to hard surfaces
*mix of fertiliser and water crystals, 'Lawn Launcher' or similar. Application rate of 10kg bucket per 330m², or to approved suppliers specifications
Lawn Starter* over prepared area
Imported Lawn Mix 70:30 (sand:organic sandy soil) typ. 150mm, as specified
Altered/ cultivated subsoil, 200mm, as specified
Sub-Surface Drainage as specified
Unaltered Subsoil
150
200

- Lay within 36 hours of cutting
- Finish flush, after tamping, with adjacent finished surfaces
- Water immediately after laying and throughout establishment

⑯ LAWN - INSTANT TURF (TYPICAL)
1:15 P3-GR-11

GRASS SEEDING: Lightly rake into the surface

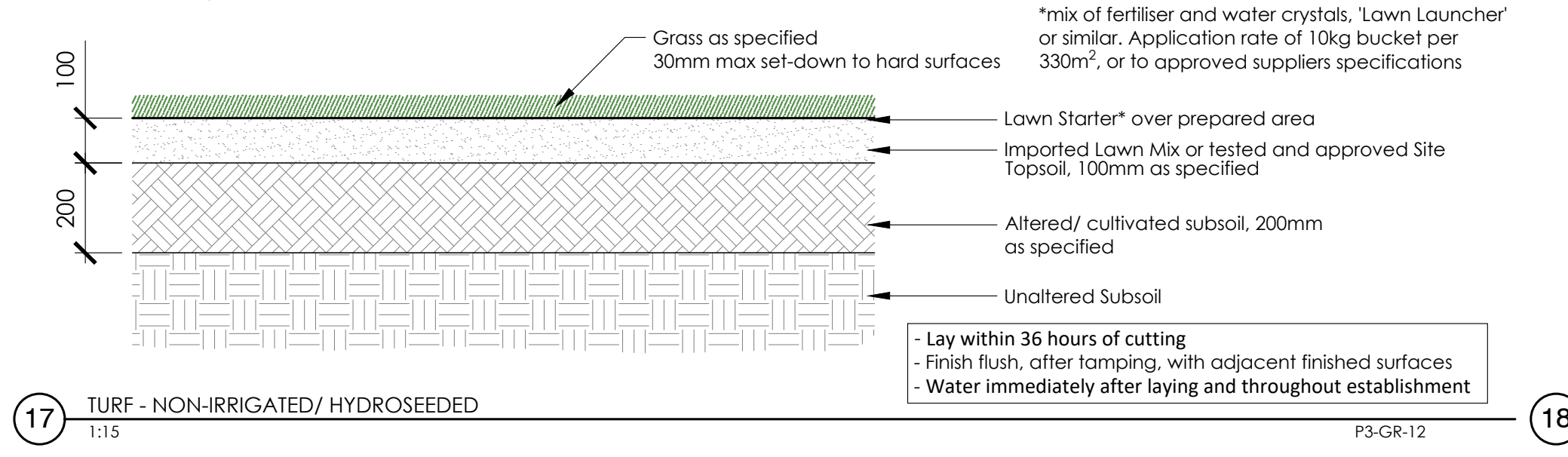

Grass as specified 30mm max set-down to hard surfaces
*mix of fertiliser and water crystals, 'Lawn Launcher' or similar. Application rate of 10kg bucket per 330m², or to approved suppliers specifications
Lawn Starter* over prepared area
Imported Lawn Mix 70:30 or tested and approved Site Topsoil, 100mm as specified
Altered/ cultivated subsoil, 200mm as specified
Unaltered Subsoil
100
200

- Lay within 36 hours of cutting
- Finish flush, after tamping, with adjacent finished surfaces
- Water immediately after laying and throughout establishment

⑰ TURF - NON-IRRIGATED/ HYDROSEEDED
1:15

Where forming part of a balustrade ensure planter, fixings and substrate etc. adhere to AS1170 Minimum Loading

Nutrient Supplement required on annual basis

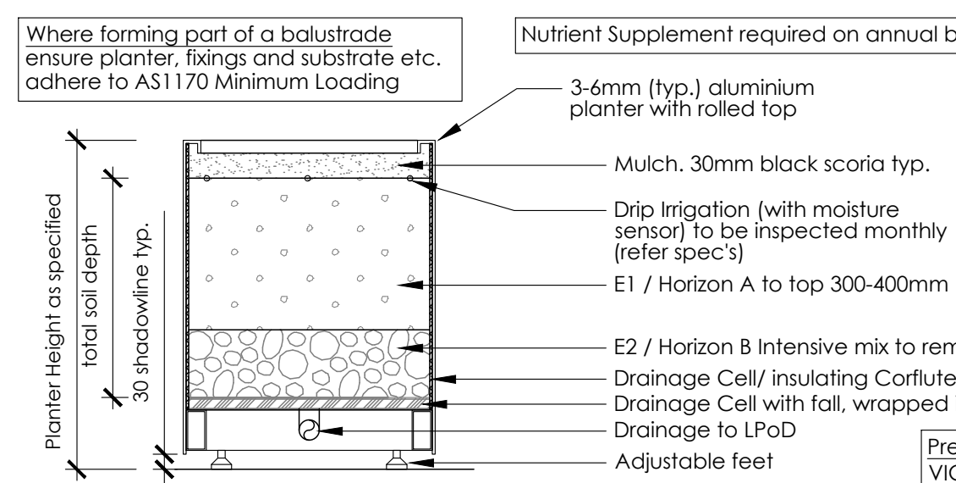

3-6mm (typ.) aluminium planter with rolled top
Mulch, 30mm black scoria typ.
Drip irrigation (with moisture sensor) as specified (refer specs)
E1 / Horizon A to top 300-400mm
E2 / Horizon B intensive mix to remaining depth
Drainage Cell/ Insulating Corflute protection Board to walls
Drainage Cell with foil, wrapped in geo-tex fabric
Drainage to LPoD
Adjustable feet
Planter Height as specified
total soil depth
30 shadowline typ.

⑲ MODULAR PLANTER, ALUMINIUM - TYPICAL DETAIL
1:15 P3-RA-23

Plant Type	Min. Soil Depth	Min. Planter Depth
Turf	- 150mm	300mm
Shrubs <1.5m tall	- 300mm	450mm
Shrubs 1.6-3m tall	- 450mm	600mm
Trees <6m tall	- 600mm	850mm
Trees 6-10m tall	- 900mm	1150mm

*For trees in high-wind zones (i.e. rooftops), use mechanical rootball anchoring system (Plati-Mat or similar)

NOTE: Read with plans and written landscape specifications. Weight loadings, safe access, connection to services by Eng. Waterproofing to AU Standards/ NCC. Supplier to provide shop drawings.

Preferred Soil Supply
VIC: Eco Dynamics
NSW: Smartmix, Benedict

VOID FORMER NOTE: EPS/ CSP or URRF shall not be used. Stacked drainage cells or rigid plastic fillers preferred.

NOTES: Material, finish and dimensions as scheduled. In areas of high wind risk (i.e. rooftops), mechanically fix tree riser to slab, with integrated root anchoring. Any associated membrane penetrations must be waterproofed by specialist to AU standards.

ROUND SHAPE SHOWN ILLUSTRATIVE ONLY. TREE RISERS MAY BE ANY SHAPE. REFER PLAN AND SCHEDULE

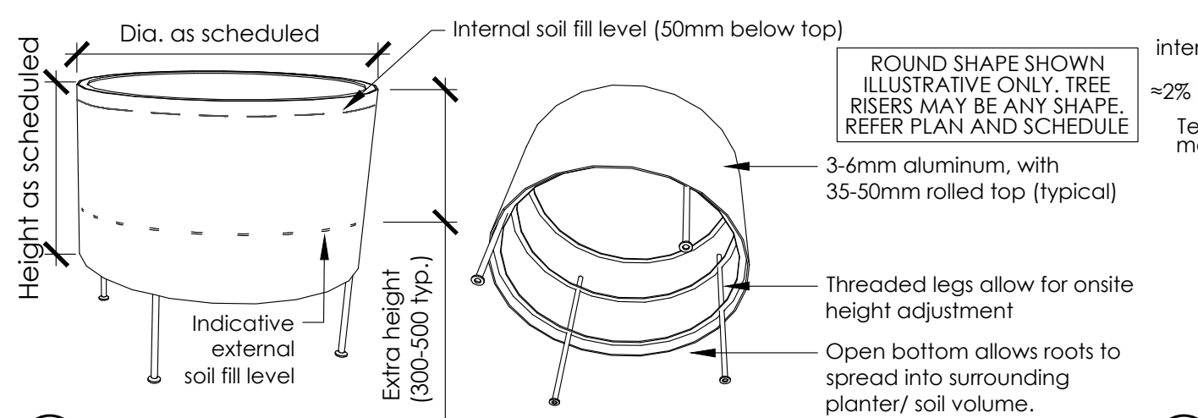

Dia. as scheduled
Internal soil fill level (50mm below top)
Height as scheduled
3-6mm aluminium, with 35-50mm rolled top (typical)
Threaded legs allow for onsite height adjustment
Open bottom allows roots to spread into surrounding planter/ soil volume.
Indicative external soil fill level
Extra height (300-500 typ.)

㉑ TREE RISER - TYPICAL DETAIL
1:25 P3-RA-22

FOR NON-DOMESTIC (PUBLIC SPACE) PROJECTS:
Before final material selections can be made, supplier is to provided evidence of Test Certificates by an independent Lab Report approved by NATA or equivalent to meet the relevant BCA and Australian Standards Criteria including AS 4586-2013 Appendix A: incorporating accelerated wear conditioning to evaluate in-service wear.

PRB Design requires this evidence to understand how the slip resistance of an individual product may alter with wear.

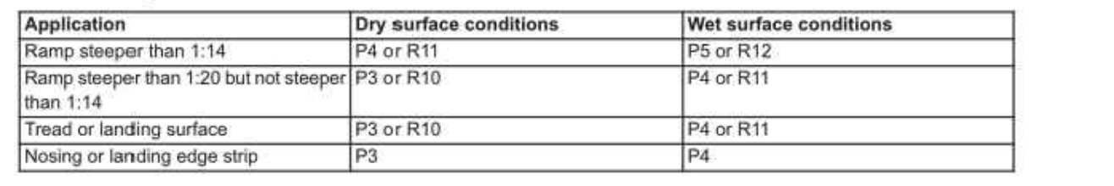

Table D2.14 Slip-resistance classification

Application	Dry surface conditions	Wet surface conditions
Ramp steeper than 1:14	P4 or R11	P5 or R12
Ramp steeper than 1:20 but not steeper than 1:14	P3 or R10	P4 or R11
Tread or landing surface	P3 or R10	P4 or R11
Nosing or landing edge strip	P3	P4

㉒ HARDSTAND SLIP-RATING COMPLIANCE
1:1 P3-HA-01

EXPANSION JOINTS TO ALL BUILDING AND WALL LINES. ISOLATION JOINTS TO ALL KERB AND PATH EDGES.

ALL RESIDENTIAL PAVING TO BE IN ACCORDANCE WITH AS 3727.1

STRUCTURAL CONCRETE TO COMPLY WITH AS 3600.

ACCESSIBLE PATHS AND RAMPS TO MEET AS 1428.1 REQUIREMENTS.

TYPICAL INFORMATION PROVIDED ONLY. ADHERE TO ENGINEER'S SPECIFICATIONS.

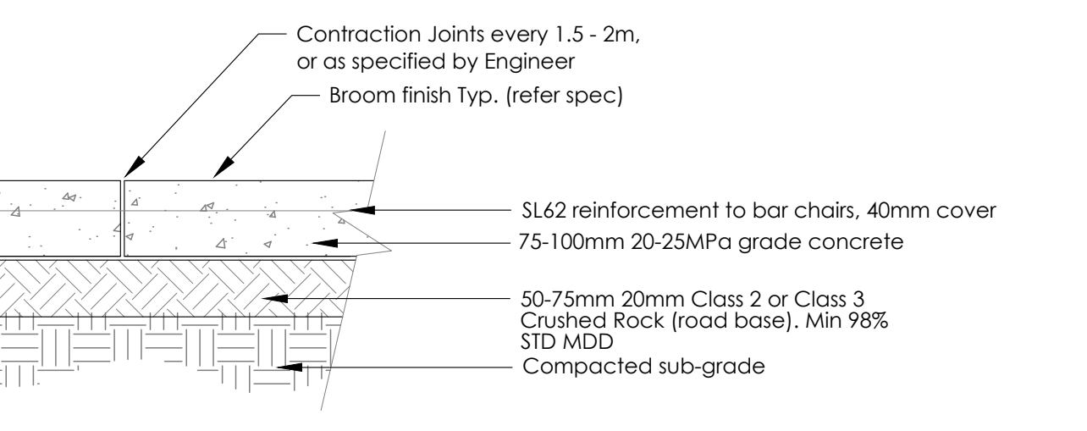

Contraction Joints every 1.5 - 2m, or as specified by Engineer
Broom finish Typ. (refer spec)
SL62 reinforcement to bar chairs, 40mm cover
75-100mm 20-25kPa grade concrete
50-75mm 20mm Class 2 or Class 3 Crushed Rock (road base). Min 98% STD MDD
Compacted sub-grade

㉔ CONCRETE FOOTPATH
1:20 TD-CO-103

EXPANSION JOINTS TO ALL BUILDING AND WALL LINES. ISOLATION JOINTS TO ALL KERB AND PATH EDGES.

ALL RESIDENTIAL PAVING TO BE IN ACCORDANCE WITH AS 3727.1

STRUCTURAL CONCRETE TO COMPLY WITH AS 3600.

ACCESSIBLE PATHS AND RAMPS TO MEET AS 1428.1 REQUIREMENTS.

TYPICAL INFORMATION PROVIDED ONLY. ADHERE TO ENGINEER'S SPECIFICATIONS.

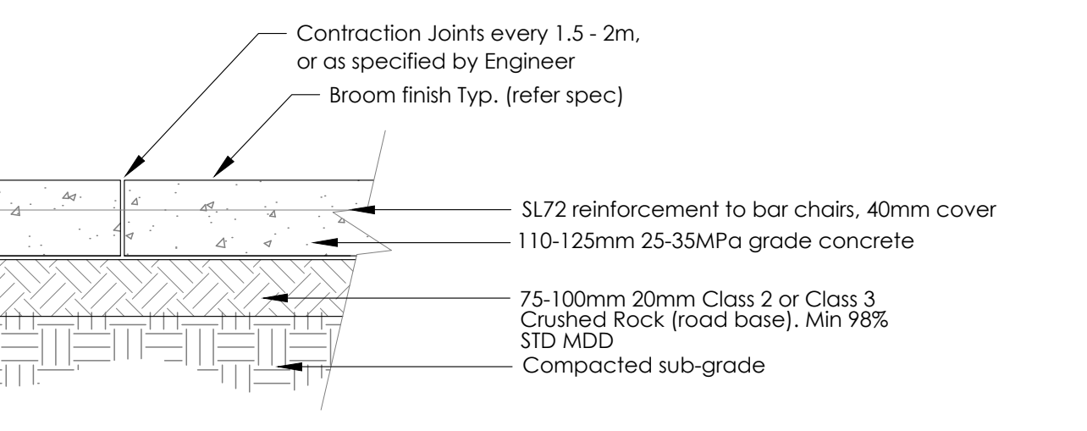

Contraction Joints every 1.5 - 2m, or as specified by Engineer
Broom finish Typ. (refer spec)
SL72 reinforcement to bar chairs, 40mm cover
110-125mm 25-35MPa grade concrete
75-100mm 20mm Class 2 or Class 3 Crushed Rock (road base). Min 98% STD MDD
Compacted sub-grade

㉕ CONCRETE DRIVE - RESIDENTIAL
1:20 TD-CO-104

EXPANSION JOINTS TO ALL BUILDING AND WALL LINES. ISOLATION JOINTS TO ALL KERB AND PATH EDGES.

ALL RESIDENTIAL PAVING TO BE IN ACCORDANCE WITH AS 3727.1

STRUCTURAL CONCRETE TO COMPLY WITH AS 3600.

ACCESSIBLE PATHS AND RAMPS TO MEET AS 1428.1 REQUIREMENTS.

TYPICAL INFORMATION PROVIDED ONLY. ADHERE TO ENGINEER'S SPECIFICATIONS.

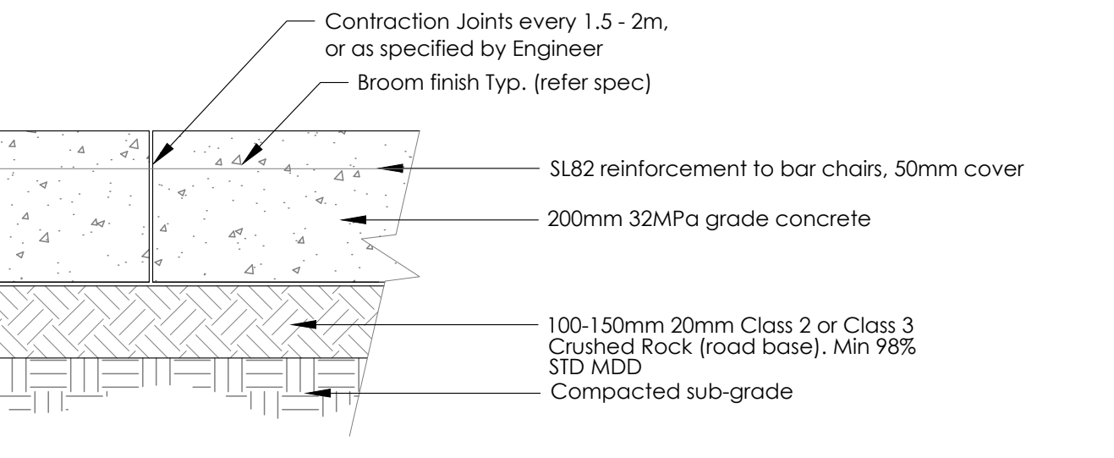

Contraction Joints every 1.5 - 2m, or as specified by Engineer
Broom finish Typ. (refer spec)
SL82 reinforcement to bar chairs, 50mm cover
200mm 32MPa grade concrete
100-150mm 20mm Class 2 or Class 3 Crushed Rock (road base). Min 98% STD MDD
Compacted sub-grade

㉖ CONCRETE DRIVE - HEAVY DUTY AND CROSSOVERS
1:20 TD-CO-109

PLANT TYPE	MINIMUM GROWING MEDIA DEPTH (soil)	MINIMUM OVERALL PLANTER DEPTH incl. mulch, drainage, fall, etc.	VEGETATION WEIGHT LOADING (kg/m2)† plants only, does not include soil etc.
Turf	150mm	300-350mm	5.1
Succulents, low growing herbaceous plants and grasses	150mm	300-350mm	10.2
Perennial herbs & small shrubs (<1.5 m tall)	300mm	450-500mm	10.2 - 20.4
Shrubs (1.6 - 3m tall)	450mm	600-650mm	30.6
Small trees (<6m tall)	600mm	850-950mm	40.8
Medium trees (6-10m tall)	900mm	1150-1250mm	61.2
Large trees (10-15m tall)	1200mm	1450-1550mm	150

† Indicative only, refer Eng. Tree load calculations should be undertaken and include the mass of the entire tree at installation (including root ball), the substrate mass and estimated mature tree mass, including trunk and canopy dimensions. Wind loading on larger trees can also contribute to green roof weight and requires a specialist engineering assessment.

Source: *Growing Green Guide: A guide to green roofs, walls and facades in Melbourne and Victoria, Australia and FLL Guidelines*

DEPTH ALLOWANCE BREAKDOWN (Included in Overall Depth)

Component	Typical allowance
Mulch layer	50mm
Drainage cell	20-50mm
Geotextile + protection board	10-20mm
Setdown for waterproofing	100mm (to AS 4654.2)
2% fall to drainage (over 10 m)	~200mm at low end*

*For spans shorter than 10 m, reduce fall allowance proportionally. For example, a 5m span would require ~100mm fall.

DESIGN & COMPLIANCE NOTES

- 100mm vertical clearance between soil/mulch and membrane termination is mandatory per AS 4654.2.
- Ensure membrane terminations are detailed clearly in sections and elevations, by Eng.
- For deep planters over habitable spaces, confirm structural capacity and waterproofing compatibility with NCC Volume One Part F1.
- Inspection ports and overflow provisions are recommended for all planters

⑱ MINIMUM PLANTER ALLOWANCES - BEST PRACTICE
1:1 P3-RA-28

Plant Type	Min. Soil Depth	Min. Planter Depth
Turf	- 150mm	300mm
Shrubs <1.5m tall	- 300mm	450mm
Shrubs 1.6-3m tall	- 450mm	600mm
Trees <6m tall	- 600mm	850mm
Trees 6-10m tall	- 900mm	1150mm

*For trees in high-wind zones (i.e. rooftops), use mechanical rootball anchoring system (Plati-Mat or similar)

Preferred Soil Supply
VIC: Eco Dynamics
NSW: Smartmix, Benedict
Super-lightweight mix: Fytogreen

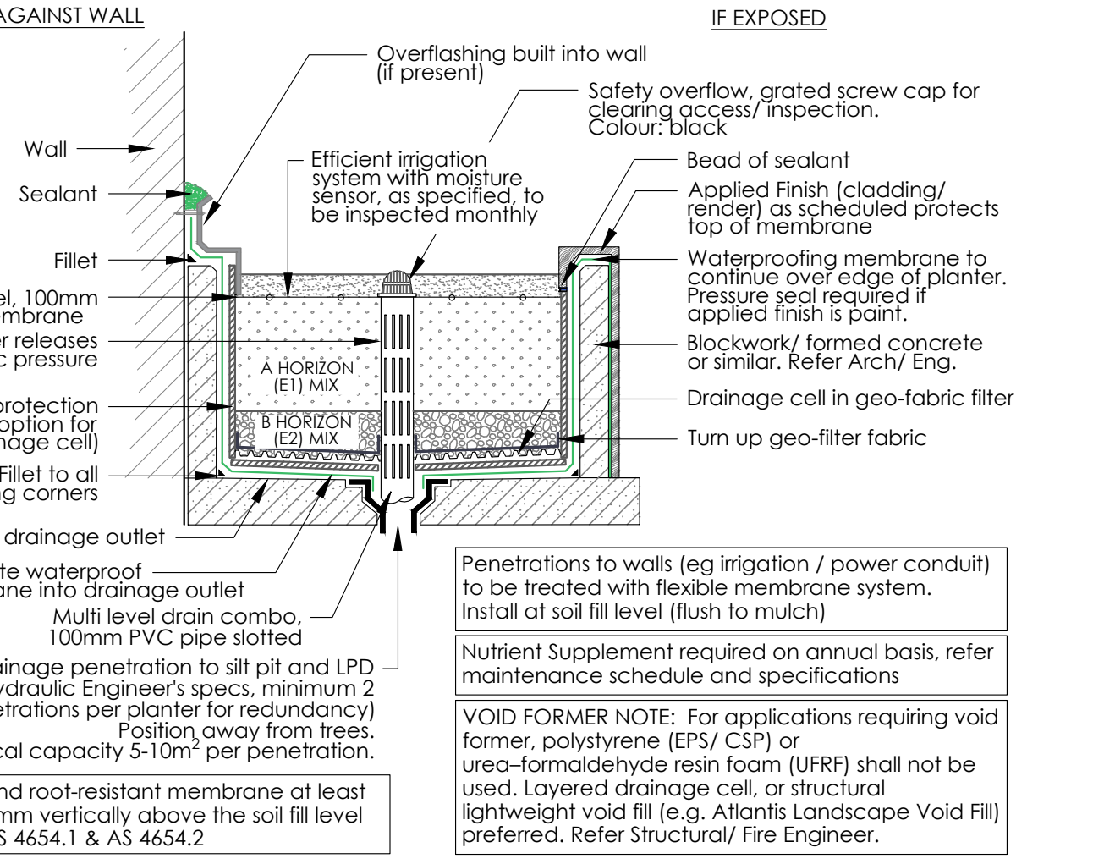

IF AGAINST WALL
IF EXPOSED
Overflashing built into wall (if present)
Safety overflow, grated screw cap for cleaning access/ inspection. 'Colour' block
Wall
Sealant
Efficient irrigation system with moisture sensor, as specified, to be inspected monthly
Bead of sealant
Applied Finish (cladding/ render) as scheduled protects top of membrane
Fillet
Waterproofing membrane to continue over edge of planter. Pressure seal required if applied finish is thin.
Soil fill level, 100mm below membrane
Riser releases hydrostatic pressure
Blockwork/ formed concrete or similar. Refer Arch/ Eng.
Drainage cell in geo-fabric filter
Corflute protection board (option for drainage cell)
Turn up geo-filter fabric
45° Fillet to all intersecting corners
A HORIZON
B HORIZON
≈2% Fall to drainage outlet
Terminate waterproof membrane into drainage outlet
Multi level drain combo, 100mm PVC pipe slotted
Drainage penetration to slit pit and LPoD (to Hydraulic Engineer's spec, minimum 2 penetrations per planter for redundancy) Position away from trees. Typical capacity 3-5m² per penetration.
Extend root-resistant membrane at least 100 mm vertically above the soil fill level to AS 4654.1 & AS 4654.2

Penetrations to walls (eg irrigation / power conduit) to be treated with flexible membrane system. Install at soil fill level (flush to mulch)

Nutrient Supplement required on annual basis, refer maintenance schedule and specifications

VOID FORMER NOTE: For applications requiring void former, polystyrene (EPS/ CSP) or urea-formaldehyde resin foam (URRF) shall not be used. Layered drainage cell, or structural lightweight void fill (e.g. Atlantis Landscape Void Fill) preferred. Refer Structural/ Fire Engineer.

⑳ IN-SITU PLANTER - TYPICAL DETAIL
1:25 P3-RA-01

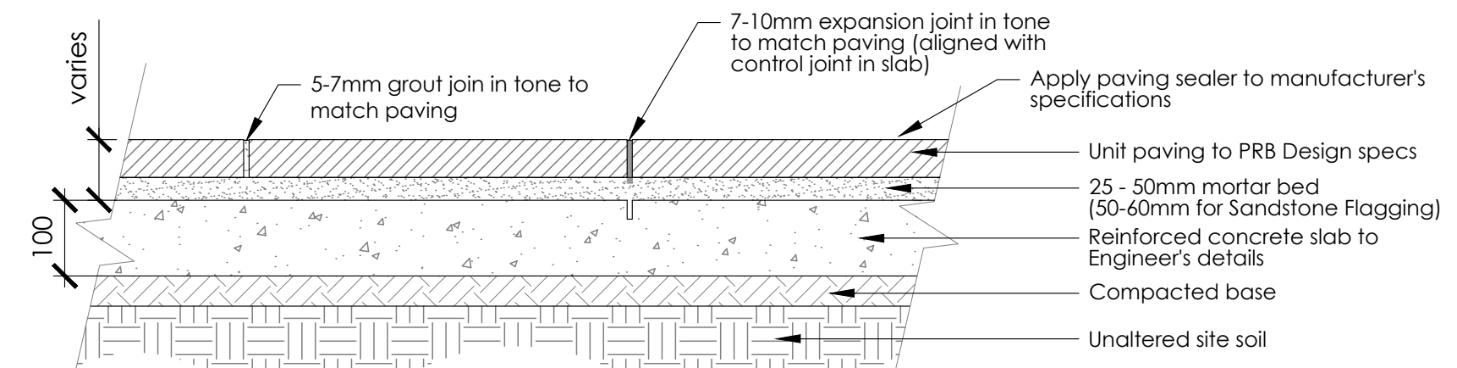

5-7mm grout join in tone to match paving
7-10mm expansion joint in tone to match paving (aligned with control joint in slab)
Apply paving sealer to manufacturer's specifications
Unit paving to PRB Design specs
25 - 30mm mortar bed (50-60mm for Sandstone Flagging)
Reinforced concrete slab to Engineer's details
Compacted base
Unaltered site soil
varies
100

㉓ UNIT PAVING/ FLAGGING TO SLAB AND MORTAR
1:10 P3-HA-02

PAUL BANGAY
THE STUDIO
54 GWYNNE STREET CREMORNE
VIC 3121 AUSTRALIA | T +61 3 9070 6050
PRB DESIGN PTY LTD | ABN 20 066 291 076
PAULBANGAY.COM

ISSUE DATE 6th May 2026
PROJECT STATUS CONCEPT DESIGN
SCALE AS SHOWN @ A1 PAGE 18 of 18
ARCHITECT STEWART ARCHITECTURE
LANDSCAPE ARCHITECT EH CHECKED BY PB
CLIENT BLOC
PROJECT FORESTRY PLACE, YARRALUMLA ACT
SITE INSPECTED 23/03/2026
-- AREA/ LEVEL 260225 JOB NO.
L800 SHEET NO. A ISSUE

DETAILS
DRAWING TITLE:
[NOT FOR CONSTRUCTION]

VERIFY ALL DIMENSIONS ON SITE PRIOR TO COMMENCEMENT OF WORKS/ ORDERING. DO NOT SCALE FROM REPRODUCED/ COPIED DRAWINGS, USE ORIGINAL PLOT ONLY.
CONTRACTOR AND CLIENT TO OBTAIN ALL PERMITS/ APPROVALS. STRUCTURAL ELEMENTS DETAILED BY PRB DESIGN FOR AESTHETIC REFERENCE ONLY.
CHECK ALL DRAWINGS, QUANTITIES AND MATERIALS; REPORT ANY DISCREPANCIES/ ERRORS TO PRB DESIGN.

PAUL BANGAY STUDIO

major works (preliminary)
forestry place