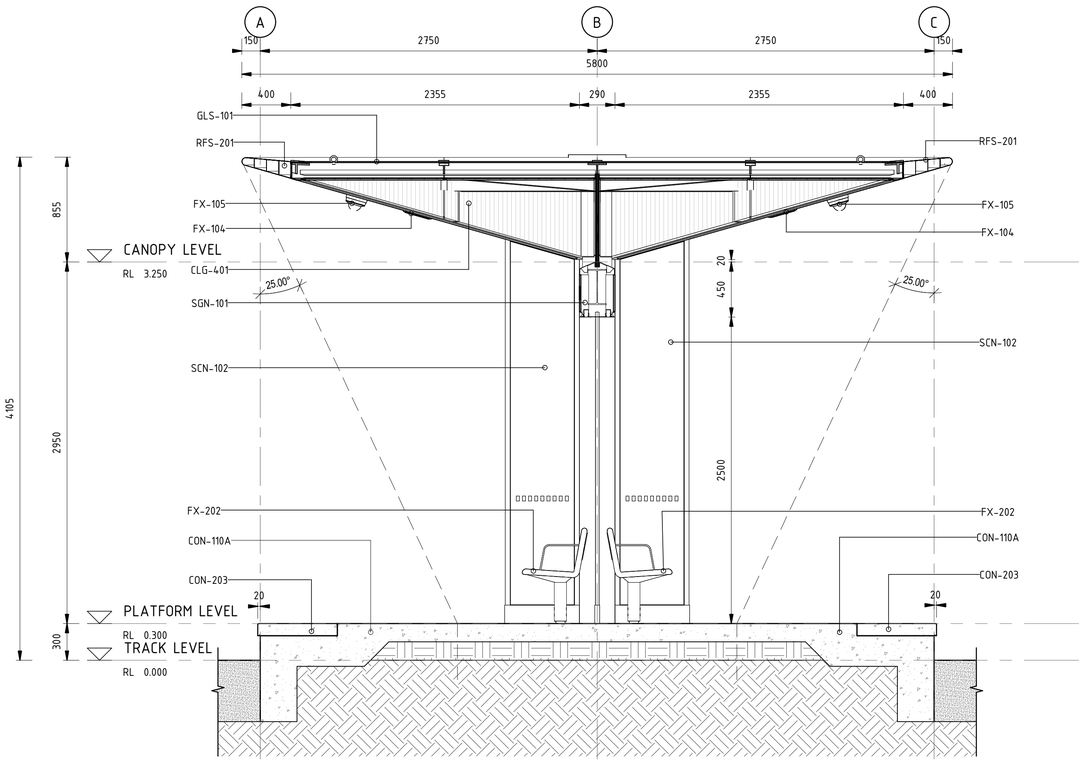

1 ISLAND PLATFORM SECTION C

Scale: 1 : 25

DRAWING COLOUR CODED - PRINT ALL COPIES IN COLOUR

SCALES AT A1 SIZE DRAWING

1:25 @ A1 0 250 500 750 1000 1250 mm

AMD	DESCRIPTION	DESIGNER SIGN / DATE	VERIFIED SIGN / DATE	APPROVED SIGN / DATE
B	STAGE 2R ISSUE	PJ 03/03	NJ 03/03	KC 03/03
A	STAGE 2 ISSUE	PJ 11/11	NJ 11/11	KC 11/11

CO-ORDINATE SYSTEM: *MGA Zone 56* | HEIGHT DATUM: *A.H.D.* | SCALE: *1 : 25 @ A1*

CapitalMetro ACT Government

CANBERRA METRO Move | Live | Grow

This drawing is confidential and shall only be used for the purpose of this project. The signing of this title block confirms the design and drafting of this project have been prepared and checked in accordance with the Architectus quality assurance system to ISO 9001-2008.

architectus™

DRAWN	PAUL JENKINS	03/03/2017
DESIGNED	PAUL JENKINS	03/03/2017
DRG CHECK	NIGEL JUSTINS	03/03/2017
DESIGN CHECK	TRENT RUSSELL	03/03/2017
APPROVED	KEVIN CURRUCAN	03/03/2017

CAPITAL METRO PROJECT

PACKAGE 55 - TYPICAL DETAILS

ARCHITECTURAL

GENERAL ARRANGEMENTS - SECTIONS

TYPICAL ISLAND PLATFORM - CANOPY SECTIONS 02

FILE No. 160117 | SHEET: OF | A1

STATUS: STAGE 2R | ©

DRG No. 03-ARC-DRW-ARC-SP-8311 | B | EDMS No.

DF 801*554

File Plotted C:\Users\PaulJenkins\Documents\160117_Typical Details_pauljenkins.rvt

Plot Date & Time 3/3/2017 1:10:14 PM

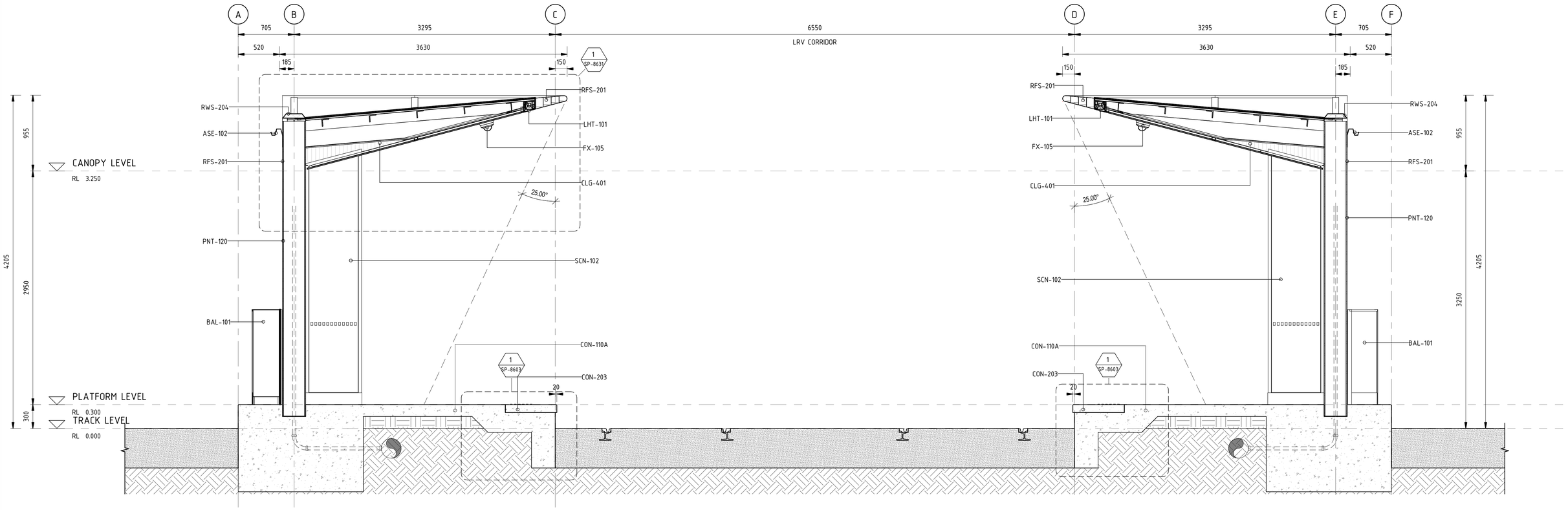

1 DETAIL_SIDE SECTION A

Scale: 1 : 25

DRAWING COLOUR CODED - PRINT ALL COPIES IN COLOUR

SCALES AT A1 SIZE DRAWING

1:25 @ A1 0 250 500 750 1000 1250 mm

AMD	DESCRIPTION	DESIGNER SIGN / DATE	VERIFIED SIGN / DATE	APPROVED SIGN / DATE
B	STAGE 2R ISSUE	PJ 03/03	NJ 03/03	KC 03/03
A	STAGE 2 ISSUE	PJ 11/11	NJ 11/11	KC 11/11

CO-ORDINATE SYSTEM: *MGA Zone 56* | HEIGHT DATUM: *A.H.D.* | SCALE: *1 : 25 @ A1*

CapitalMetro ACT Government

CANBERRA METRO Move | Live | Grow

This drawing is confidential and shall only be used for the purpose of this project. The signing of this title block confirms the design and drafting of this project have been prepared and checked in accordance with the Architectus quality assurance system to ISO 9001-2008.

architectus™

DRAWN	PAUL JENKINS	03/03/2017
DESIGNED	PAUL JENKINS	03/03/2017
DRG CHECK	NIGEL JUSTINS	03/03/2017
DESIGN CHECK	TRENT RUSSELL	03/03/2017
APPROVED	KEVIN CURRUCAN	03/03/2017

CAPITAL METRO PROJECT

PACKAGE 55 - TYPICAL DETAILS

ARCHITECTURAL

GENERAL ARRANGEMENTS - SECTIONS

TYPICAL SIDE PLATFORM - CANOPY SECTIONS 01

FILE No. 160117 | SHEET: OF | A1

STATUS: STAGE 2R | ©

DRG No. 03-ARC-DRW-ARC-SP-8320 | B | EDMS No.

DF 801*554

File Plotted C:\Users\PaulJenkins\Documents\160117_Typical Details_pauljenkins.rvt

Plot Date & Time 3/3/2017 1:10:26 PM

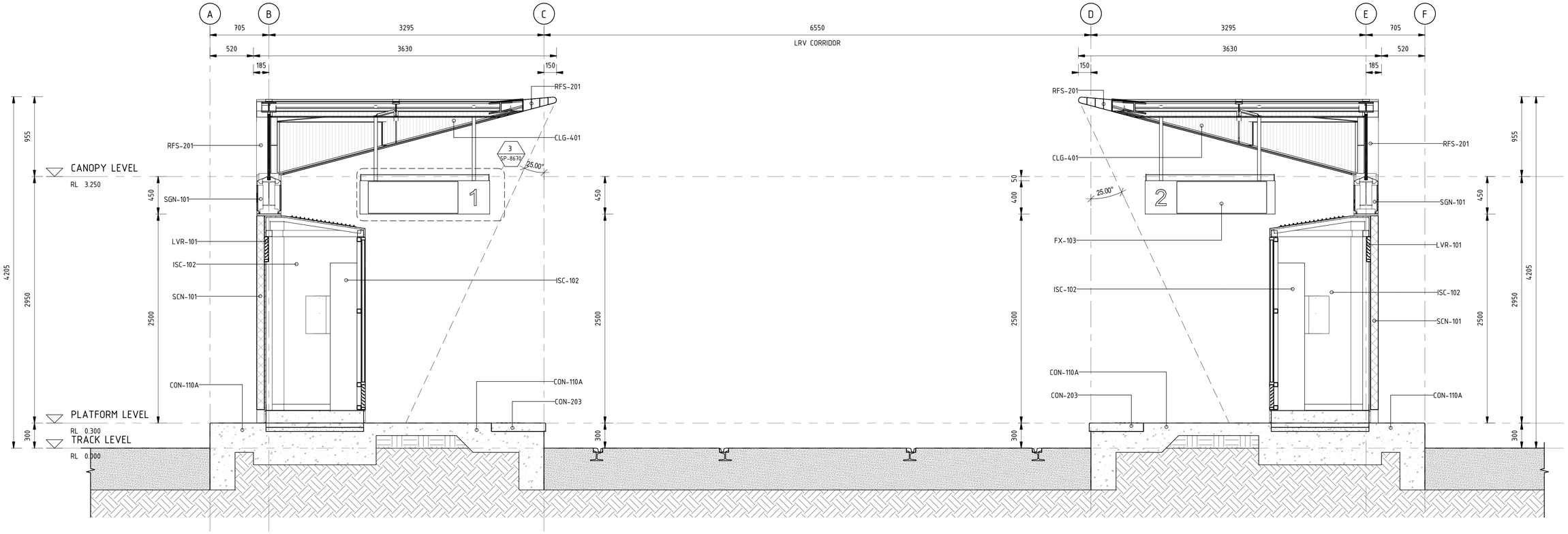

1 DETAIL_SIDE SECTION B

Scale: 1 : 25

DRAWING COLOUR CODED - PRINT ALL COPIES IN COLOUR

SCALES AT A1 SIZE DRAWING

1:25 @ A1 0 250 500 750 1000 1250 mm

AMD	DESCRIPTION	DESIGNER SIGN / DATE	VERIFIED SIGN / DATE	APPROVED SIGN / DATE
B	STAGE 2R ISSUE	PJ 03/03	NJ 03/03	KC 03/03
A	STAGE 2 ISSUE	PJ 11/11	NJ 11/11	KC 11/11

CO-ORDINATE SYSTEM: *MGA Zone 56* | HEIGHT DATUM: *A.H.D.* | SCALE: *1 : 25 @ A1*

CapitalMetro ACT Government

CANBERRA METRO Move | Live | Grow

This drawing is confidential and shall only be used for the purpose of this project. The signing of this title block confirms the design and drafting of this project have been prepared and checked in accordance with the Architectus quality assurance system to ISO 9001-2008.

architectus™

DRAWN	PAUL JENKINS	03/03/2017
DESIGNED	PAUL JENKINS	03/03/2017
DRG CHECK	NIGEL JUSTINS	03/03/2017
DESIGN CHECK	TRENT RUSSELL	03/03/2017
APPROVED	KEVIN CURRUCAN	03/03/2017

CAPITAL METRO PROJECT

PACKAGE 55 - TYPICAL DETAILS

ARCHITECTURAL

GENERAL ARRANGEMENTS - SECTIONS

TYPICAL SIDE PLATFORM - CANOPY SECTIONS 02

FILE No. 160117 | SHEET: OF | A1

STATUS: STAGE 2R | ©

DRG No. 03-ARC-DRW-ARC-SP-8321 | B | EDMS No.

DF 801*554

File Plotted C:\Users\PaulJenkins\Documents\160117_Typical Details_pauljenkins.rvt

Plot Date & Time 3/3/2017 1:11:26 PM

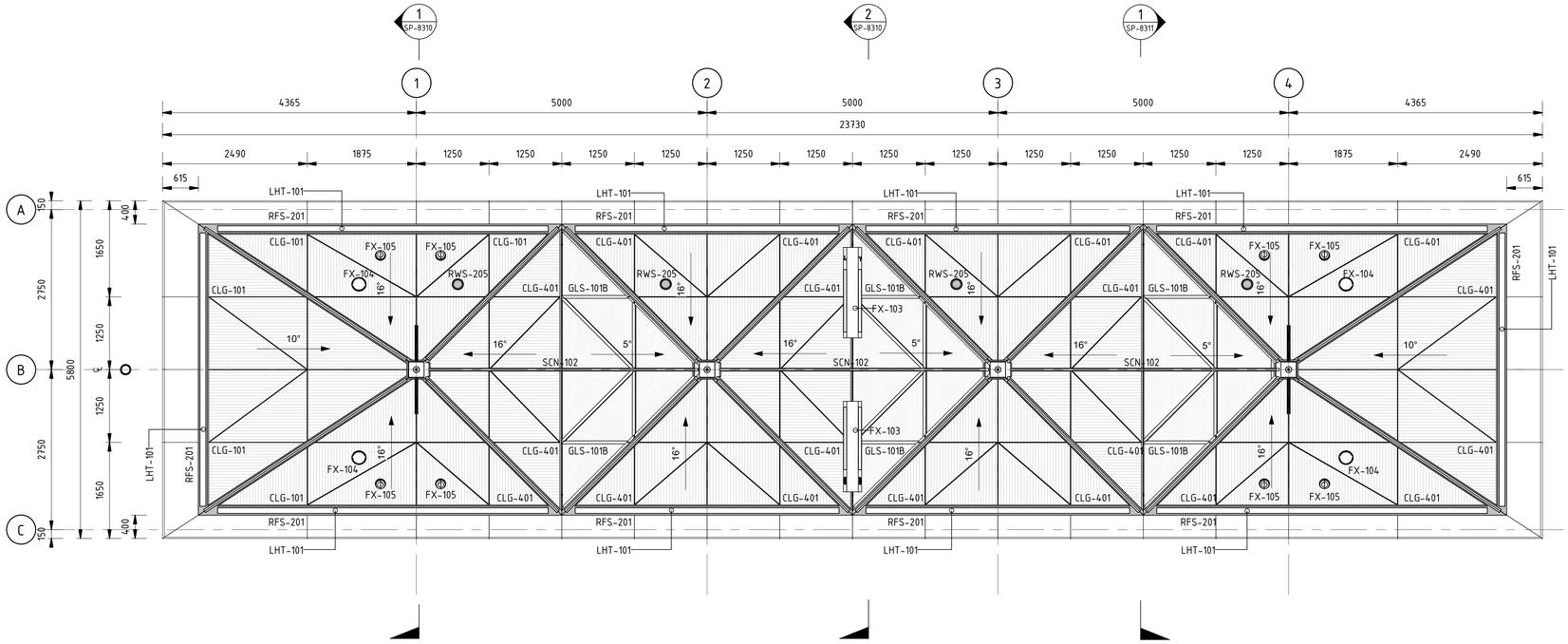

1 ISLAND PLATFORM - CANOPY RCP

Scale: 1 : 50

DRAWING COLOUR CODED - PRINT ALL COPIES IN COLOUR

AMD	DESCRIPTION	DESIGNER SIGN / DATE	VERIFIED SIGN / DATE	APPROVED SIGN / DATE
A	STAGE 2R ISSUE	PJ 03/03	NJ 03/03	KC 03/03

CO-ORDINATE SYSTEM: *MGA Zone 56* | HEIGHT DATUM: *A.H.D.* | SCALE: *1 : 50 @ A1*

CapitalMetro ACT Government

CANBERRA METRO Move | Live | Grow

This drawing is confidential and shall only be used for the purpose of this project. The signing of this title block confirms the design and drafting of this project have been prepared and checked in accordance with the Architectus quality assurance system to ISO 9001-2008.

architectus™

DRAWN	PAUL JENKINS	03/03/2017
DESIGNED	PAUL JENKINS	03/03/2017
DRG CHECK	NIGEL JUSTINS	03/03/2017
DESIGN CHECK	TRENT RUSSELL	03/03/2017
APPROVED	KEVIN CURRUCAN	03/03/2017

CAPITAL METRO PROJECT

PACKAGE 55 - TYPICAL DETAILS

ARCHITECTURAL

GENERAL ARRANGEMENTS - RCPS

TYPICAL ISLAND CANOPY - REFLECTED CEILING PLAN

FILE No. 160117 | SHEET: OF | A1

STATUS: STAGE 2R | ©

DRG No. 03-ARC-DRW-ARC-SP-8410 | A | EDMS No.

DF 801*554

File Plotted C:\Users\PaulJenkins\Documents\160117_Typical Details_pauljenkins.rvt

Plot Date & Time 3/3/2017 1:11:54 PM

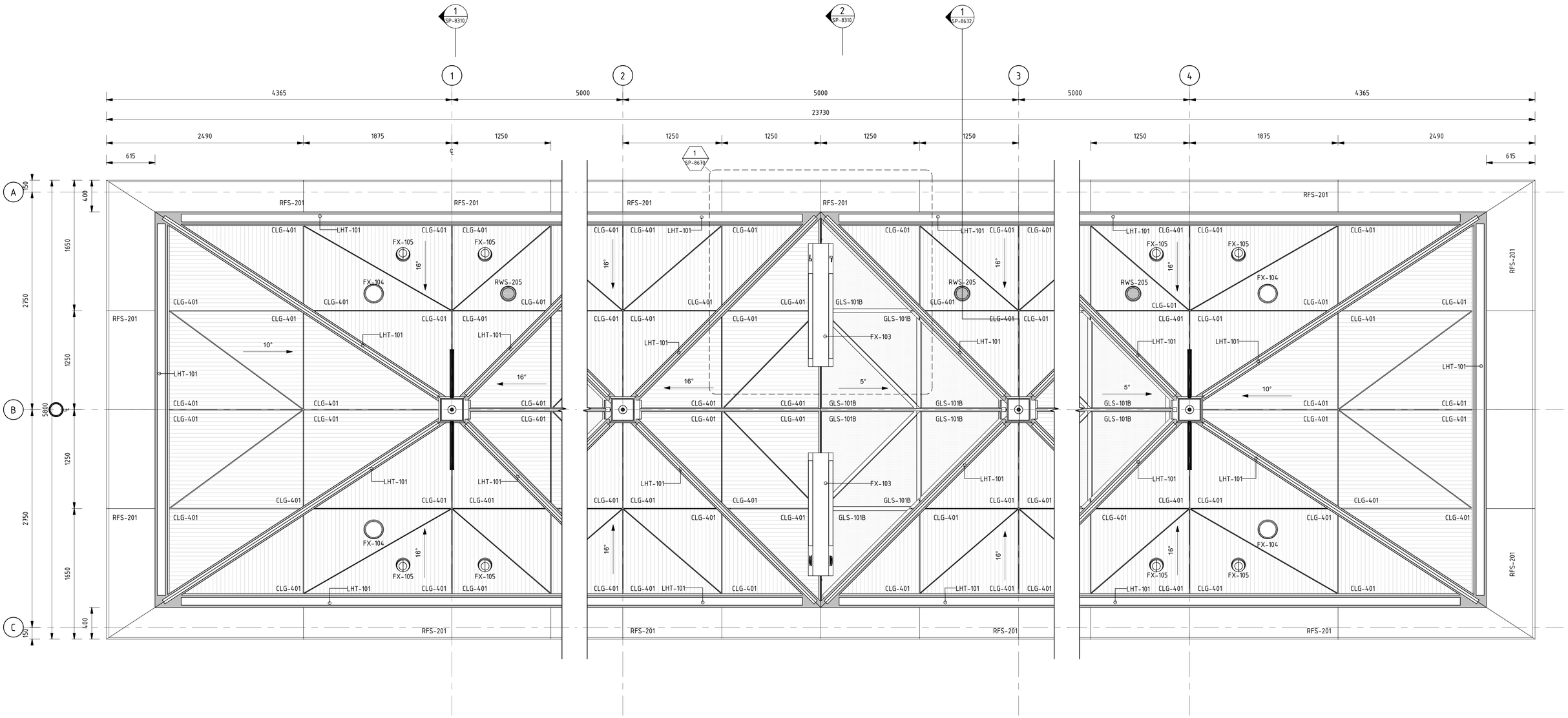

1 ISLAND PLATFORM - MODULE RCP

Scale: 1 : 25

DRAWING COLOUR CODED - PRINT ALL COPIES IN COLOUR

SCALES AT A1 SIZE DRAWING

1:25 @ A1 0 250 500 750 1000 1250 mm

AMD	DESCRIPTION	DESIGNER SIGN / DATE	VERIFIED SIGN / DATE	APPROVED SIGN / DATE
B	STAGE 2R ISSUE	PJ 03/03	NJ 03/03	KC 03/03
A	STAGE 2 ISSUE	PJ 11/11	NJ 11/11	KC 11/11

CO-ORDINATE SYSTEM: *MGA Zone 56* HEIGHT DATUM: *A.H.D.* SCALE: *1 : 25 @ A1*

CapitalMetro ACT Government

CANBERRA METRO Move | Live | Grow

This drawing is confidential and shall only be used for the purpose of this project. The signing of this title block confirms the design and drafting of this project have been prepared and checked in accordance with the Architectus quality assurance system to ISO 9001-2008.

architectus™

DRAWN	PAUL JENKINS	03/03/2017
DESIGNED	PAUL JENKINS	03/03/2017
DRG CHECK	NIGEL JUSTINS	03/03/2017
DESIGN CHECK	TRENT RUSSELL	03/03/2017
APPROVED	KEVIN CURRUCAN	03/03/2017

CAPITAL METRO PROJECT

PACKAGE 55 - TYPICAL DETAILS

ARCHITECTURAL

GENERAL ARRANGEMENTS - RCPS

TYPICAL ISLAND MODULE - REFLECTED CEILING PLAN

FILE No. 160117 SHEET: OF A1

STATUS: STAGE 2R ©

DRG No. 03-ARC-DRW-ARC-SP-8411 B EDMS No.

DF 801*554

File Plotted C:\Users\PaulJenkins\Documents\160117_Typical Details_pauljenkins.rvt

Plot Date & Time 3/3/2017 1:12:06 PM

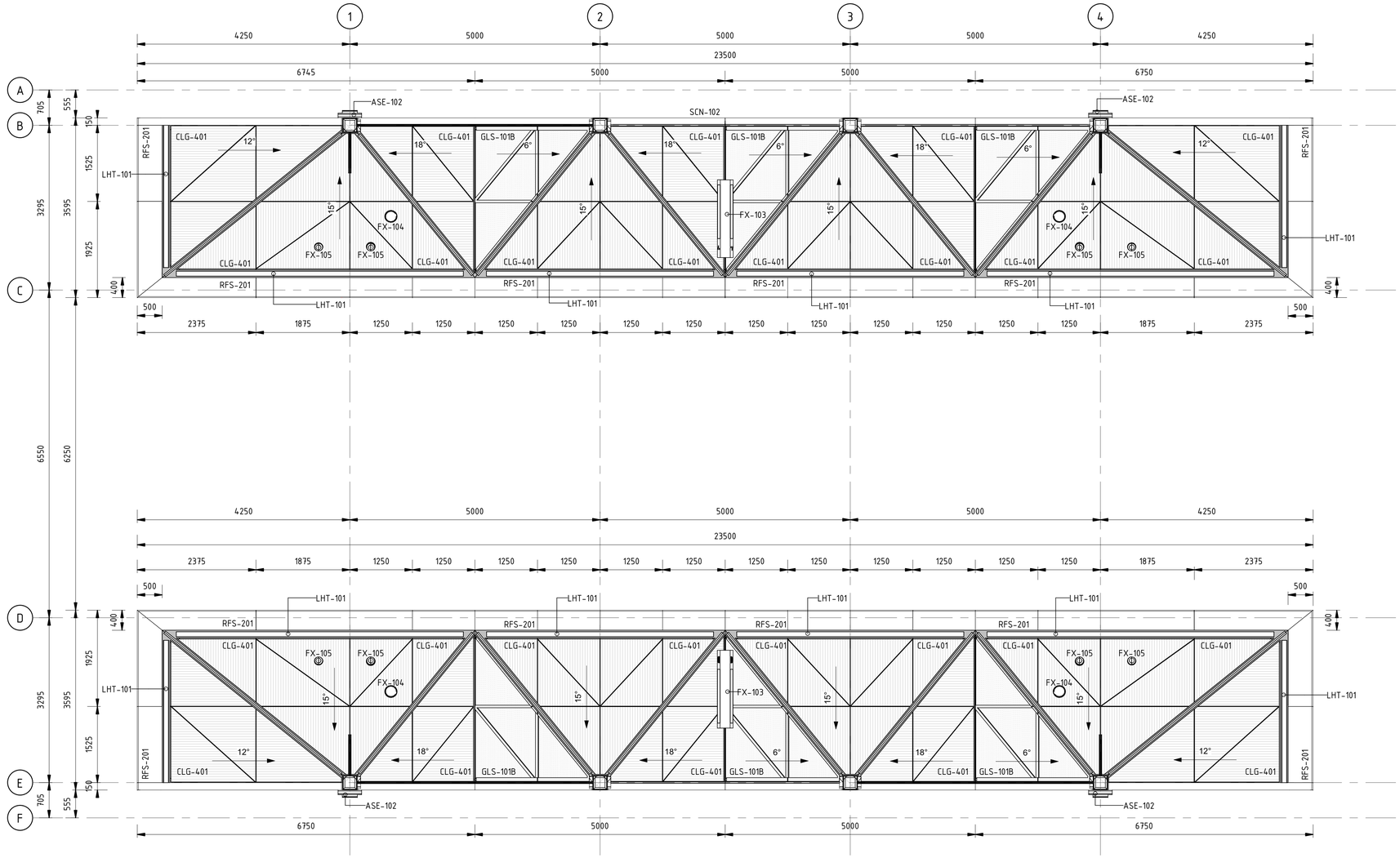

1 SIDE PLATFORM RCP

Scale: 1 : 50

DRAWING COLOUR CODED - PRINT ALL COPIES IN COLOUR

AMD	DESCRIPTION	DESIGNER SIGN / DATE	VERIFIED SIGN / DATE	APPROVED SIGN / DATE
A	STAGE 2R ISSUE	PJ 03/03	NJ 03/03	KC 03/03

CO-ORDINATE SYSTEM: *MGA Zone 56* | HEIGHT DATUM: *A.H.D.* | SCALE: *1 : 50 @ A1*

CapitalMetro ACT Government

CANBERRA METRO Move | Live | Grow

This drawing is confidential and shall only be used for the purpose of this project. The signing of this title block confirms the design and drafting of this project have been prepared and checked in accordance with the Architectus quality assurance system to ISO 9001-2008.

architectus™

DRAWN	PAUL JENKINS	03/03/2017
DESIGNED	PAUL JENKINS	03/03/2017
DRG CHECK	NIGEL JUSTINS	03/03/2017
DESIGN CHECK	TRENT RUSSELL	03/03/2017
APPROVED	KEVIN CURRUCAN	03/03/2017

CAPITAL METRO PROJECT

PACKAGE 55 - TYPICAL DETAILS

ARCHITECTURAL

GENERAL ARRANGEMENTS - RCPS

TYPICAL SIDE CANOPY - REFLECTED CEILING PLAN

FILE No. 160117 | SHEET: OF | A1

STATUS: STAGE 2R | ©

DRG No. 03-ARC-DRW-ARC-SP-8420 | A | EDMS No.

DF 801*554

File Plotted C:\Users\PaulJenkins\Documents\160117_Typical Details_pauljenkins.rvt

Plot Date & Time 3/3/2017 11:12:18 PM

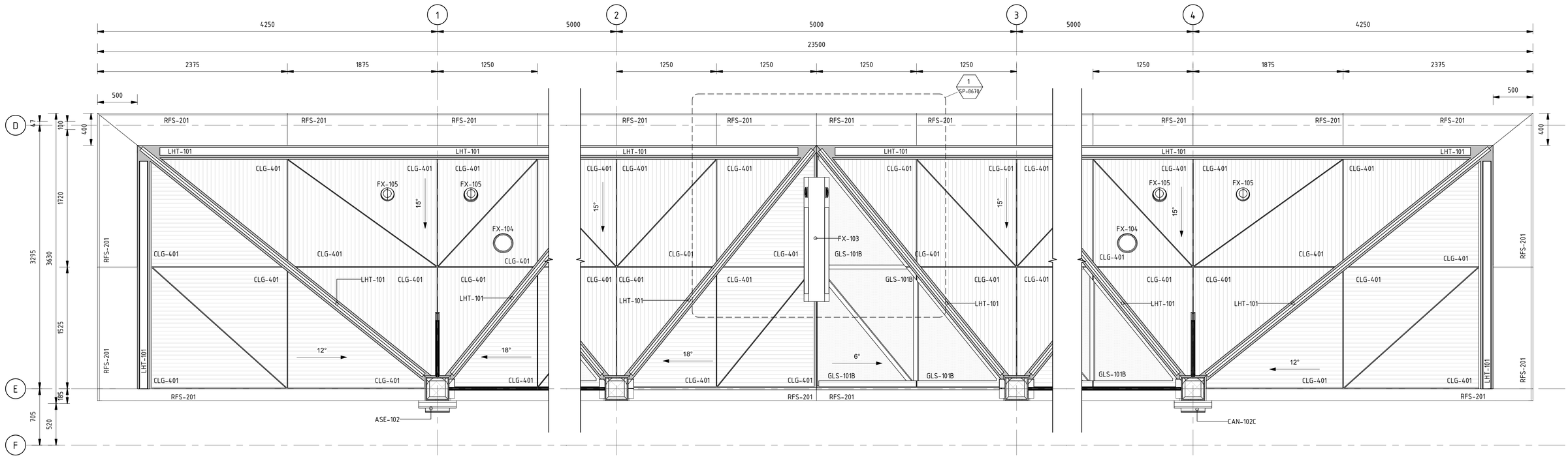

1 SIDE PLATFORM - MODULE RCP

Scale: 1 : 25

File Plotted C:\Users\PaulJenkins\Documents\160117_Typical Details_paulJenkins.rvt

Plot Date & Time 3/3/2017 11:12:29 PM

DRAWING COLOUR CODED - PRINT ALL COPIES IN COLOUR

SCALES AT A1 SIZE DRAWING

1:25 @ A1 0 250 500 750 1000 1250 mm

AMD	DESCRIPTION	DESIGNER SIGN / DATE	VERIFIED SIGN / DATE	APPROVED SIGN / DATE
B	STAGE 2R ISSUE	PJ 03/03	NJ 03/03	KC 03/03
A	STAGE 2 ISSUE	PJ 11/11	NJ 11/11	KC 11/11

CO-ORDINATE SYSTEM: *MGA Zone 56* | HEIGHT DATUM: *A.H.D.* | SCALE: *1 : 25 @ A1*

CapitalMetro ACT Government

CANBERRA METRO Move | Live | Grow

This drawing is confidential and shall only be used for the purpose of this project. The signing of this title block confirms the design and drafting of this project have been prepared and checked in accordance with the Architectus quality assurance system to ISO 9001-2008.

architectus™

DRAWN	PAUL JENKINS	03/03/2017
DESIGNED	PAUL JENKINS	03/03/2017
DRG CHECK	NIGEL JUSTINS	03/03/2017
DESIGN CHECK	TRENT RUSSELL	03/03/2017
APPROVED	KEVIN CURRUCAN	03/03/2017

CAPITAL METRO PROJECT

PACKAGE 55 - TYPICAL DETAILS

ARCHITECTURAL

GENERAL ARRANGEMENTS - RCPS

TYPICAL SIDE MODULE - REFLECTED CEILING PLAN

FILE No. 160117 | SHEET: OF | A1

STATUS: STAGE 2R | ©

DRG No. 03-ARC-DRW-ARC-SP-8421 | B | EDMS No.

DF 801*554

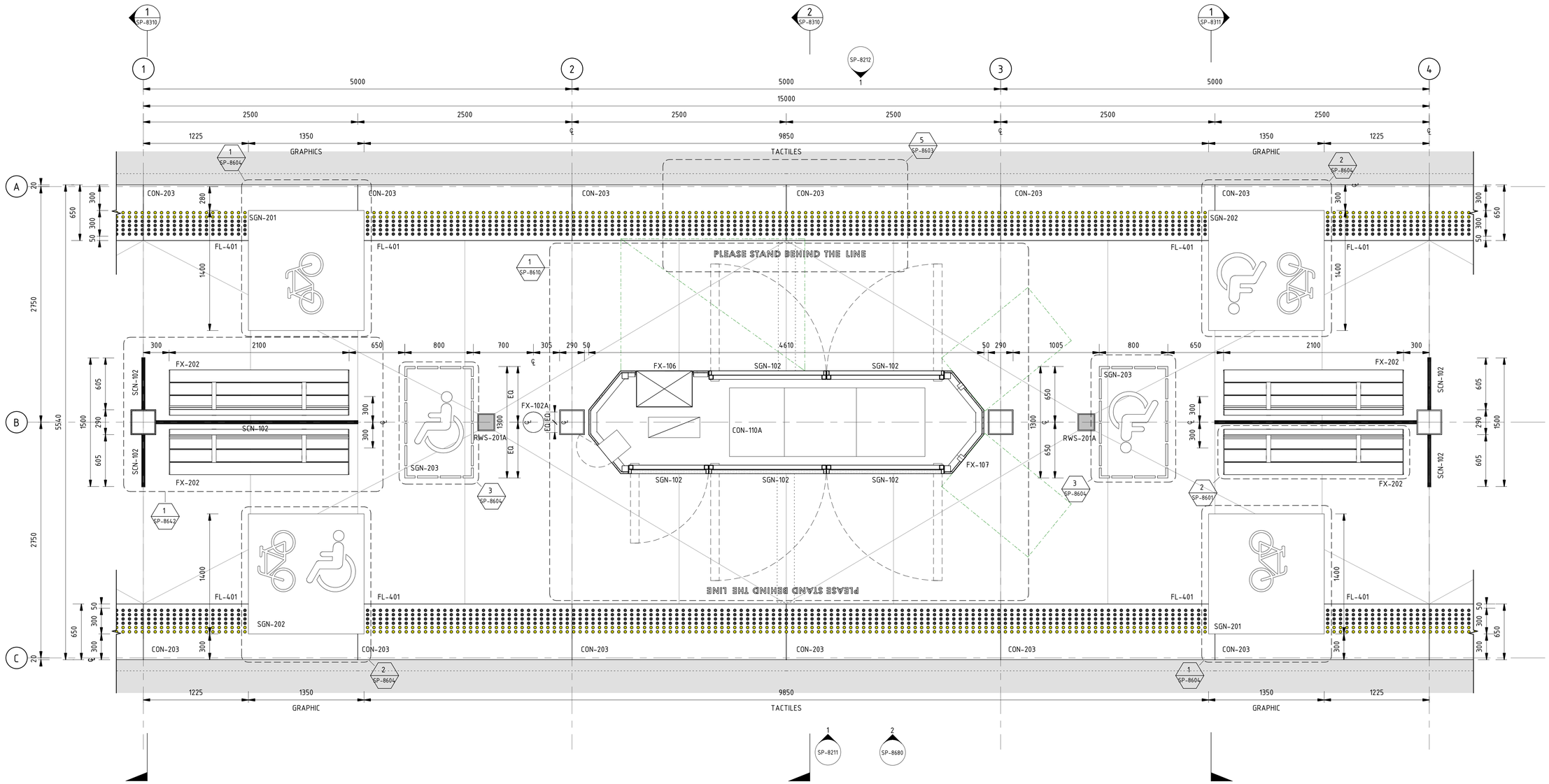

1 ISLAND MODULE PLAN

Scale: 1 : 25

DRAWING COLOUR CODED - PRINT ALL COPIES IN COLOUR

SCALES AT A1 SIZE DRAWING

1:25 @ A1 0 250 500 750 1000 1250 mm

AMD	DESCRIPTION	DESIGNER SIGN / DATE	VERIFIED SIGN / DATE	APPROVED SIGN / DATE
B	STAGE 2R ISSUE	PJ 03/03	NJ 03/03	KC 03/03
A	STAGE 2 ISSUE	PJ 11/11	NJ 11/11	KC 11/11

CO-ORDINATE SYSTEM: *MGA Zone 56* HEIGHT DATUM: *A.H.D.* SCALE: *1 : 25 @ A1*

CapitalMetro ACT Government

CANBERRA METRO Move | Live | Grow

This drawing is confidential and shall only be used for the purpose of this project. The signing of this title block confirms the design and drafting of this project have been prepared and checked in accordance with the Architectus quality assurance system to ISO 9001-2008.

architectus™

DRAWN	PAUL JENKINS	03/03/2017
DESIGNED	PAUL JENKINS	03/03/2017
DRG CHECK	NIGEL JUSTINS	03/03/2017
DESIGN CHECK	TRENT RUSSELL	03/03/2017
APPROVED	KEVIN CURRUCAN	03/03/2017

CAPITAL METRO PROJECT

PACKAGE 55 - TYPICAL DETAILS

ARCHITECTURAL

MODULE PLANS

TYPICAL ISLAND MODULE - PLAN

FILE No. 160117 SHEET: OF A1

STATUS: STAGE 2R ©

DRG No. 03-ARC-DRW-ARC-SP-8510 B EDMS No.

DF 801*554

File Plotted C:\Users\PaulJenkins\Documents\160117_Typical Details_pauljenkins.rvt

Plot Date & Time 3/3/2017 1:13:11 PM

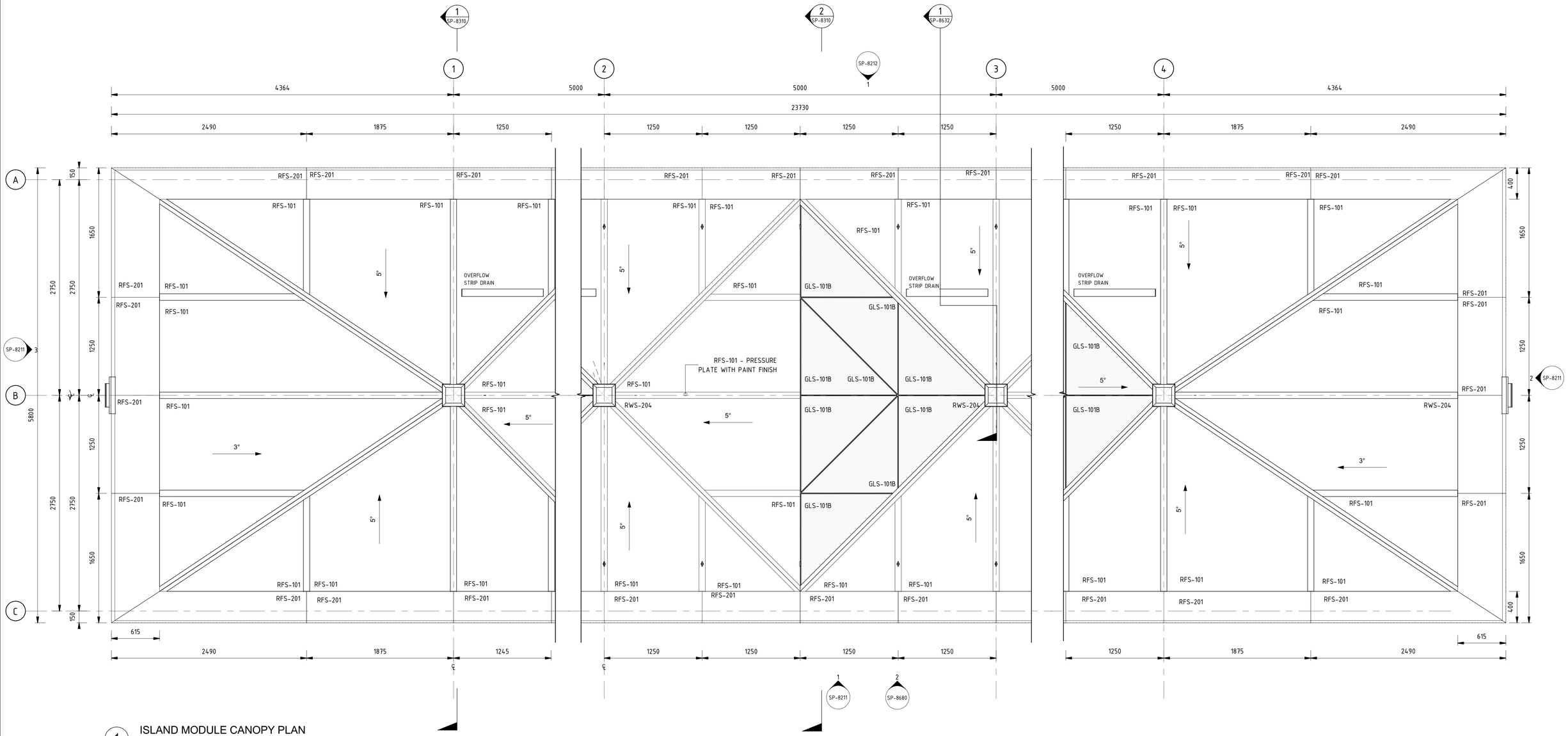

1 ISLAND MODULE CANOPY PLAN

Scale: 1 : 25

DRAWING COLOUR CODED - PRINT ALL COPIES IN COLOUR

SCALES AT A1 SIZE DRAWING

1:25 @ A1 0 250 500 750 1000 1250 mm

AMD	DESCRIPTION	DESIGNER SIGN / DATE	VERIFIED SIGN / DATE	APPROVED SIGN / DATE
B	STAGE 2R ISSUE	PJ 03/03	NJ 03/03	KC 03/03
A	STAGE 2 ISSUE	PJ 11/11	NJ 11/11	KC 11/11

CO-ORDINATE SYSTEM: *MGA Zone 56* | HEIGHT DATUM: *A.H.D.* | SCALE: *1 : 25 @ A1*

CapitalMetro ACT Government

CANBERRA METRO Move | Live | Grow

This drawing is confidential and shall only be used for the purpose of this project. The signing of this title block confirms the design and drafting of this project have been prepared and checked in accordance with the Architectus quality assurance system to ISO 9001-2008.

architectus™

DRAWN	PAUL JENKINS	03/03/2017
DESIGNED	PAUL JENKINS	03/03/2017
DRG CHECK	NIGEL JUSTINS	03/03/2017
DESIGN CHECK	TRENT RUSSELL	03/03/2017
APPROVED	KEVIN CURRUCAN	03/03/2017

CAPITAL METRO PROJECT

PACKAGE 55 - TYPICAL DETAILS

ARCHITECTURAL MODULE PLANS

TYPICAL ISLAND MODULE - CANOPY PLAN

FILE No. 160117 | SHEET: OF | A1

STATUS: STAGE 2R | ©

DRG No. 03-ARC-DRW-ARC-SP-8511 | B | EDMS No.

DF 801*554

File Plotted C:\Users\PaulJenkins\Documents\160117_Typical Details_pauljenkins.rvt

Plot Date & Time 3/3/2017 11:13:24 PM

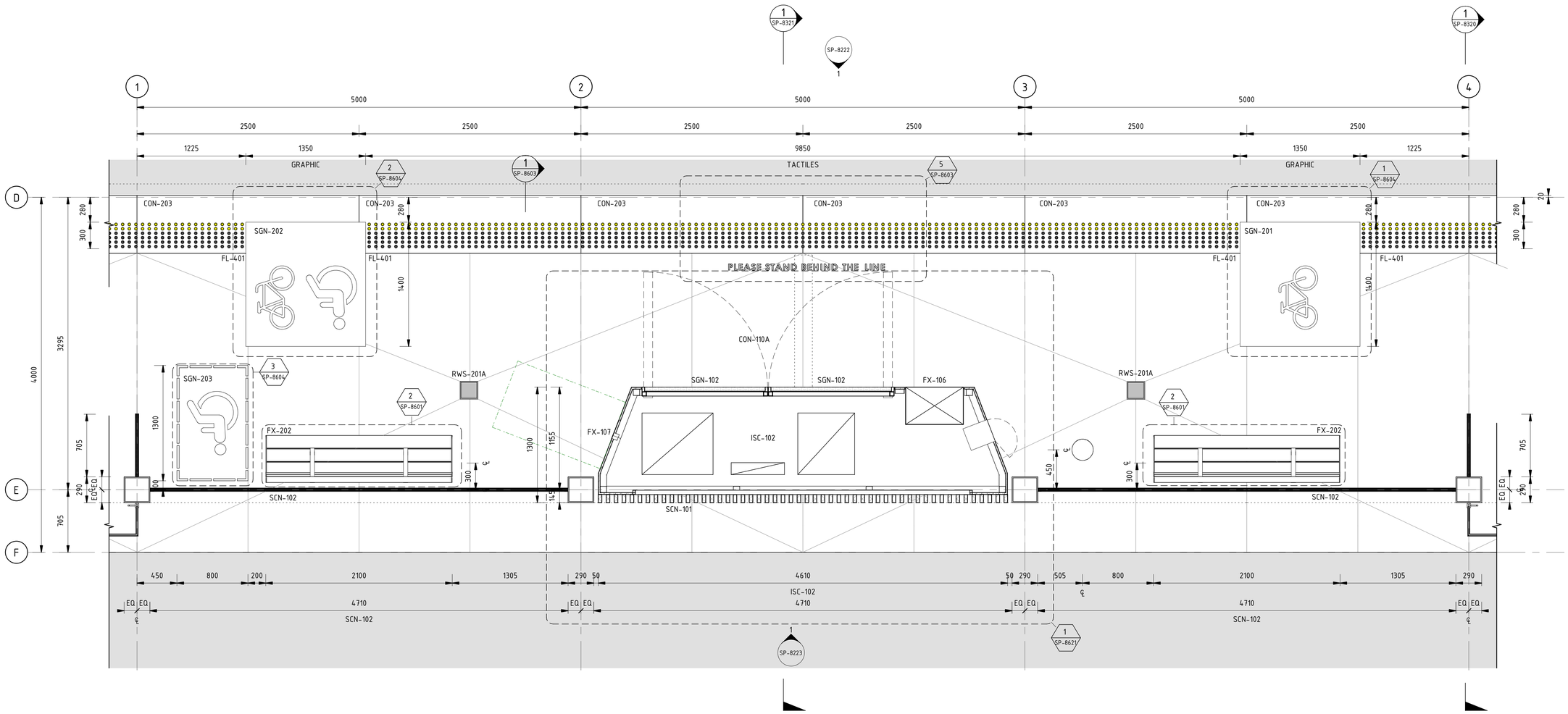

1 SIDE MODULE PLAN

Scale: 1 : 25

DRAWING COLOUR CODED - PRINT ALL COPIES IN COLOUR

SCALES AT A1 SIZE DRAWING

1:25 @ A1 0 250 500 750 1000 1250 mm

AMD	DESCRIPTION	DESIGNER SIGN / DATE	VERIFIED SIGN / DATE	APPROVED SIGN / DATE
B	STAGE 2R ISSUE	PJ 03/03	NJ 03/03	KC 03/03
A	STAGE 2 ISSUE	PJ 11/11	NJ 11/11	KC 11/11

CO-ORDINATE SYSTEM: *MGA Zone 56* | HEIGHT DATUM: *A.H.D.* | SCALE: *1 : 25 @ A1*

CapitalMetro ACT Government

CANBERRA METRO Move | Live | Grow

This drawing is confidential and shall only be used for the purpose of this project. The signing of this title block confirms the design and drafting of this project have been prepared and checked in accordance with the Architectus quality assurance system to ISO 9001-2008.

architectus™

DRAWN	PAUL JENKINS	03/03/2017
DESIGNED	PAUL JENKINS	03/03/2017
DRG CHECK	NIGEL JUSTINS	03/03/2017
DESIGN CHECK	TRENT RUSSELL	03/03/2017
APPROVED	KEVIN CURRUCAN	03/03/2017

CAPITAL METRO PROJECT

PACKAGE 55 - TYPICAL DETAILS

ARCHITECTURAL MODULE PLANS

TYPICAL SIDE MODULE - PLAN

FILE No. 160117 | SHEET: OF | A1

STATUS: STAGE 2R ©

DRG No. 03-ARC-DRW-ARC-SP-8520 | B | EDMS No.

DF 801*554

File Plotted C:\Users\PaulJenkins\Documents\160117_Typical Details_pauljenkins.rvt

Plot Date & Time 3/3/2017 1:13:36 PM

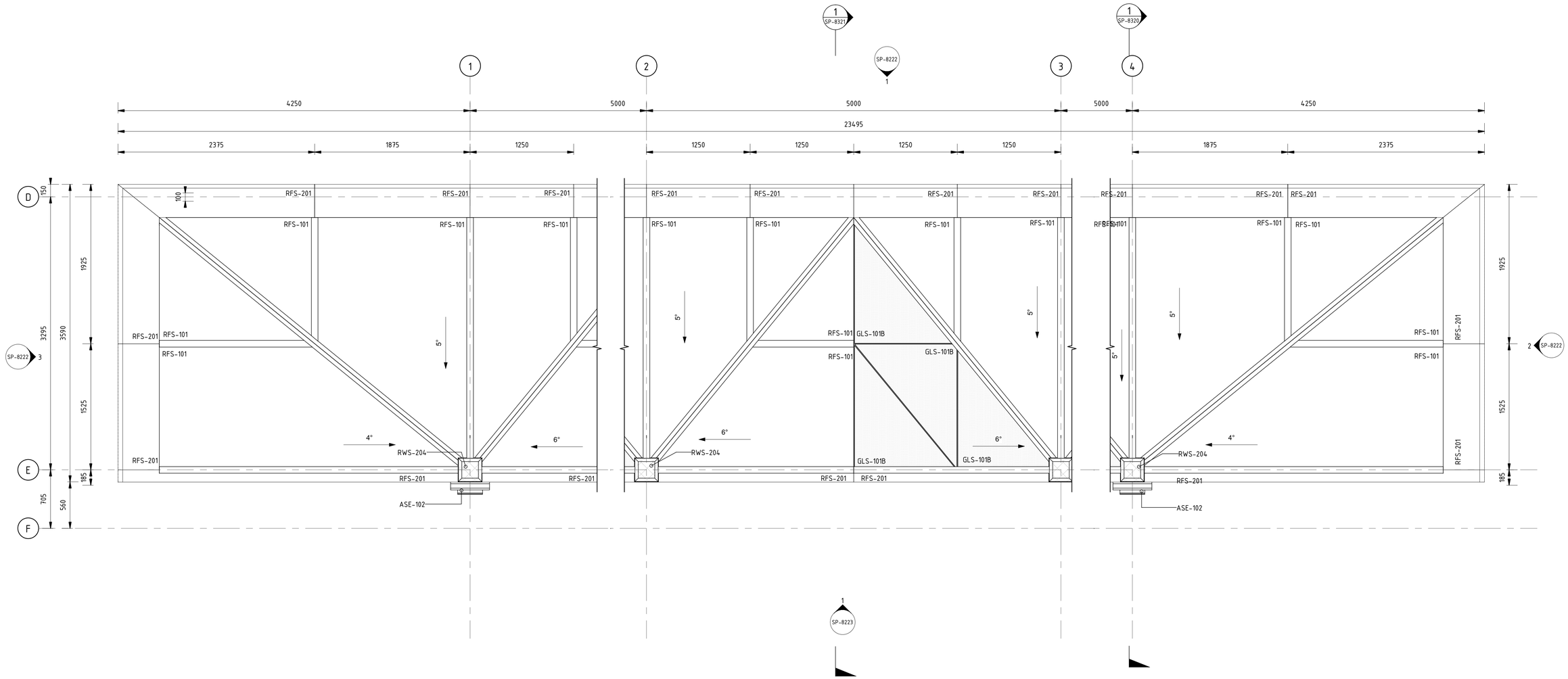

1 SIDE MODULE CANOPY PLAN

Scale: 1 : 25

DRAWING COLOUR CODED - PRINT ALL COPIES IN COLOUR

SCALES AT A1 SIZE DRAWING

1:25 @ A1 0 250 500 750 1000 1250 mm

AMD	DESCRIPTION	DESIGNER SIGN / DATE	VERIFIED SIGN / DATE	APPROVED SIGN / DATE
B	STAGE 2R ISSUE	PJ 03/03	NJ 03/03	KC 03/03
A	STAGE 2 ISSUE	PJ 11/11	NJ 11/11	KC 11/11

CO-ORDINATE SYSTEM: *MGA Zone 56* HEIGHT DATUM: *A.H.D.* SCALE: *1 : 25 @ A1*

CapitalMetro ACT Government

CANBERRA METRO Move | Live | Grow

This drawing is confidential and shall only be used for the purpose of this project. The signing of this title block confirms the design and drafting of this project have been prepared and checked in accordance with the Architectus quality assurance system to ISO 9001-2008.

architectus™

DRAWN	PAUL JENKINS	03/03/2017
DESIGNED	PAUL JENKINS	03/03/2017
DRG CHECK	NIGEL JUSTINS	03/03/2017
DESIGN CHECK	TRENT RUSSELL	03/03/2017
APPROVED	KEVIN CURRUCAN	03/03/2017

CAPITAL METRO PROJECT

PACKAGE 55 - TYPICAL DETAILS

ARCHITECTURAL MODULE PLANS

TYPICAL SIDE MODULE - CANOPY PLAN

FILE No. 160117 SHEET: OF A1

STATUS: STAGE 2R ©

DRG No. 03-ARC-DRW-ARC-SP-8521 B EDMS No.

DF 801*554

File Plotted C:\Users\PaulJenkins\Documents\160117_Typical Details_pauljenkins.rvt

Plot Date & Time 3/3/2017 1:13:45 PM

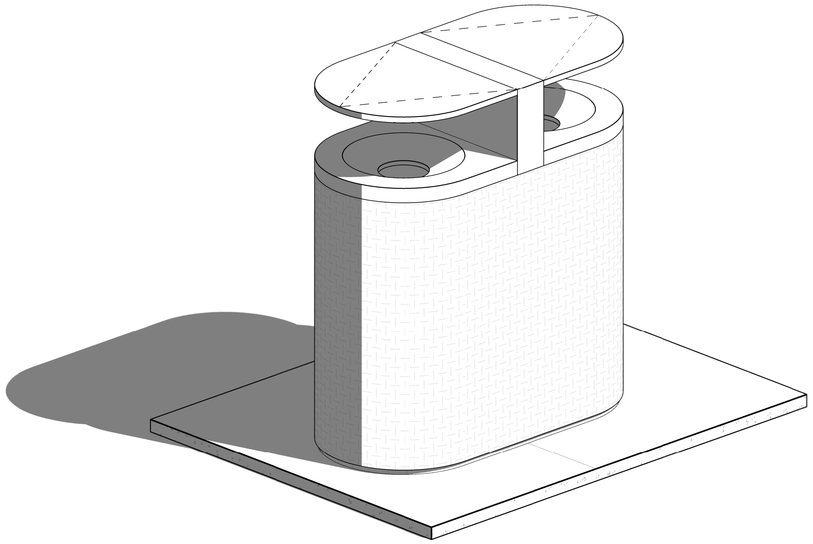

1 FX-201 - PLATFORM BIN 3D

Scale:

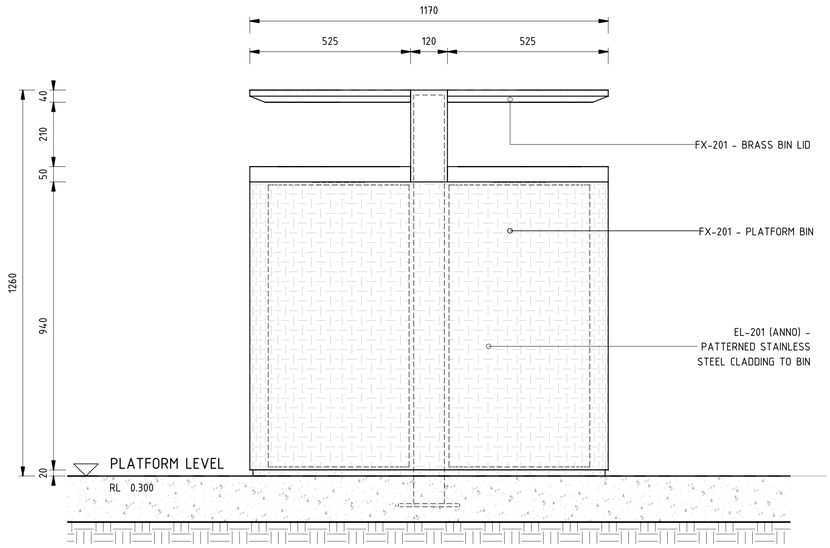

3 FX-201 - PLATFORM BIN FRONT ELEVATION

Scale: 1 : 10

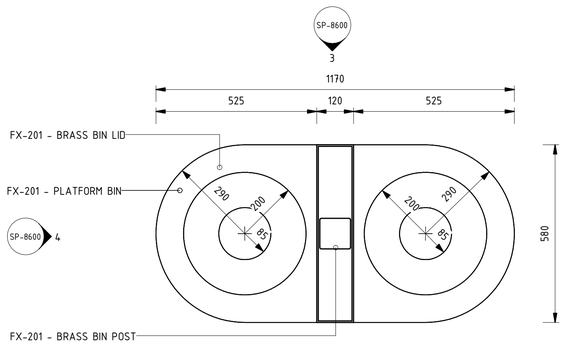

2 FX-201 - PLATFORM BIN PLAN

Scale: 1 : 10

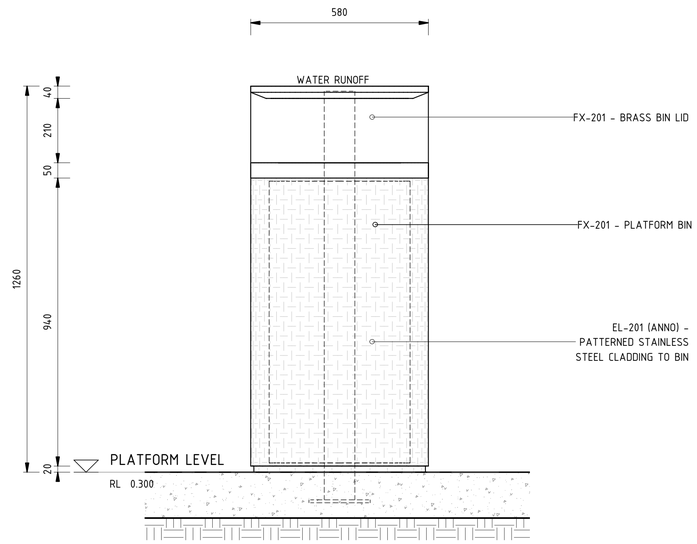

4 FX-201 - PLATFORM BIN SIDE ELEVATION

Scale: 1 : 10

DRAWING COLOUR CODED - PRINT ALL COPIES IN COLOUR

SCALES AT A1 SIZE DRAWING

1:10 @ A1 0 100 200 300 400 500 mm

AMD	DESCRIPTION	DESIGNER SIGN / DATE	VERIFIED SIGN / DATE	APPROVED SIGN / DATE
C	STAGE 2R ISSUE	PJ 03/03	NJ 03/03	KC 03/03
B	STAGE 2 ISSUE	PJ 11/11	NJ 11/11	KC 11/11
A	STAGE 1 ISSUE	PJ 05/08	NJ 05/08	KC 05/08

CO-ORDINATE SYSTEM: *MGA Zone 56* HEIGHT DATUM: *A.H.D.* SCALE: *1 : 10 @ A1*

CapitalMetro ACT Government

CANBERRA METRO Move | Live | Grow

This drawing is confidential and shall only be used for the purpose of this project. The signing of this title block confirms the design and drafting of this project have been prepared and checked in accordance with the Architectus quality assurance system to ISO 9001-2008.

architectus™

DRAWN	PAUL JENKINS	03/03/2017
DESIGNED	PAUL JENKINS	03/03/2017
DRG CHECK	NIGEL JUSTINS	03/03/2017
DESIGN CHECK	TRENT RUSSELL	03/03/2017
APPROVED	KEVIN CURRUCAN	03/03/2017

CAPITAL METRO PROJECT

PACKAGE 55 - TYPICAL DETAILS

ARCHITECTURAL PLATFORM ELEMENTS

TYPICAL PLATFORM BIN - DETAILS

FILE No. 160117 SHEET: OF A1

STATUS: STAGE 2R ©

DRG No. 03-ARC-DRW-ARC-SP-8600 C EDMS No.

DF 801*554

File Plotted C:\Users\PaulJenkins\Documents\160117_Typical Details_pauljenkins.rvt

Plot Date & Time 3/3/2017 1:14:33 PM

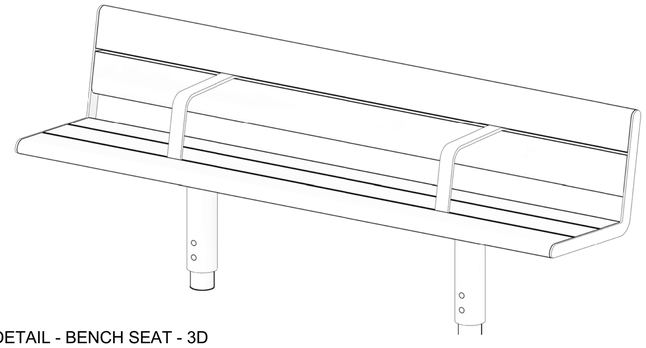

1 DETAIL - BENCH SEAT - 3D

Scale:

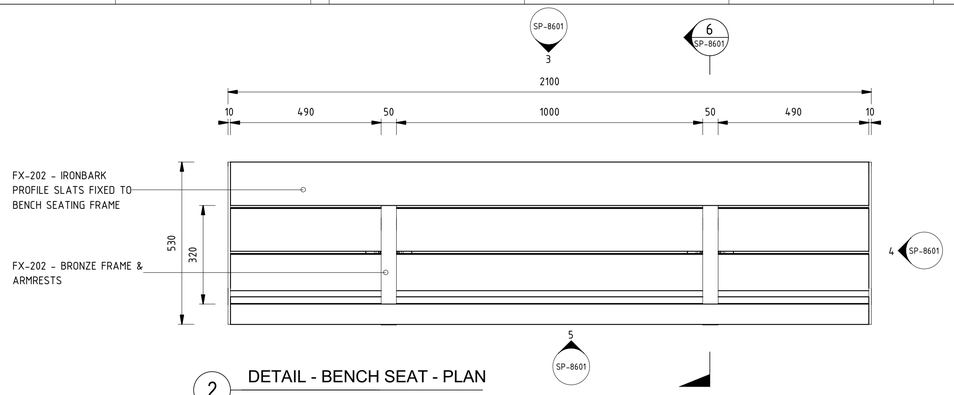

2 DETAIL - BENCH SEAT - PLAN

Scale: 1 : 10

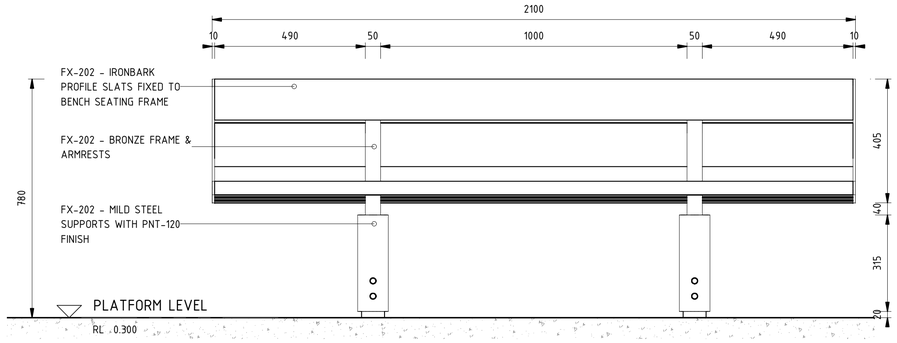

3 DETAIL - BENCH SEAT - FRONT ELEVATION

Scale: 1 : 10

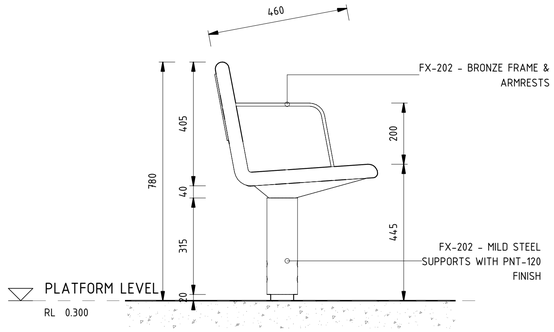

4 DETAIL - BENCH SEAT - SIDE ELEVATION

Scale: 1 : 10

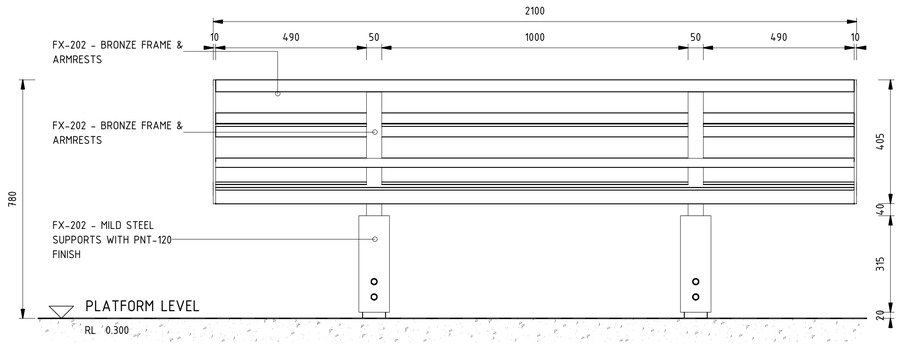

5 DETAIL - BENCH SEAT - BACK ELEVATION

Scale: 1 : 10

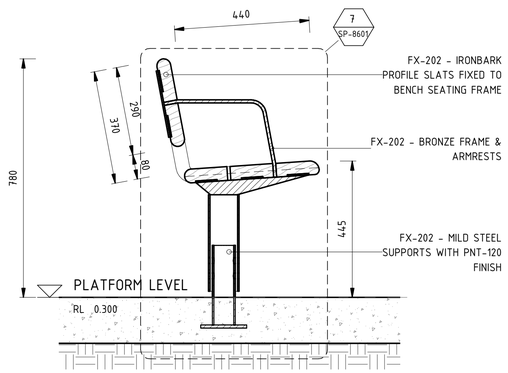

6 DETAIL - BENCH SEAT - SECTION

Scale: 1 : 10

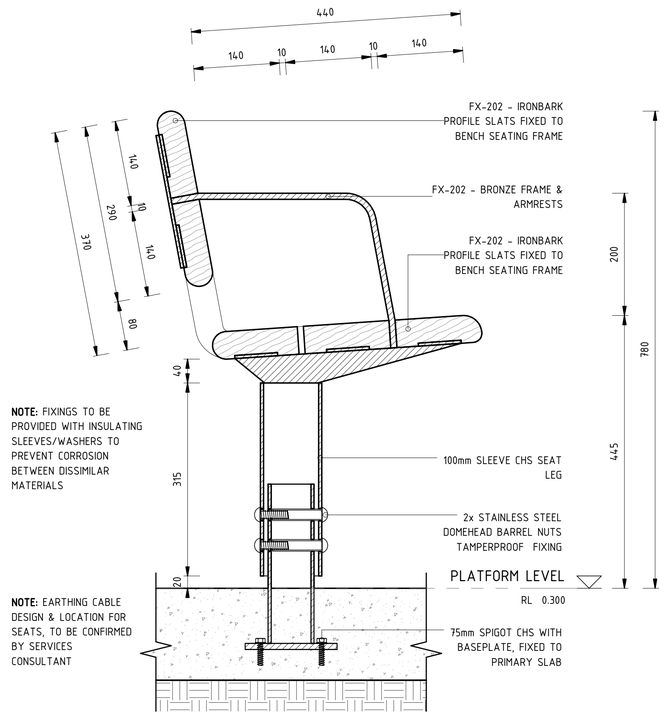

7 DETAIL - BENCH SEAT - DETAIL

Scale: 1 : 5

File Plotted C:\Users\PaulJenkins\Documents\160117_Typical Details_paulJenkins.rvt

Plot Date & Time 3/3/2017 11:13:56 PM

DRAWING COLOUR CODED - PRINT ALL COPIES IN COLOUR

SCALES AT A1 SIZE DRAWING

1:10 @ A1 0 100 200 300 400 500 mm

AMD	DESCRIPTION	DESIGNER SIGN / DATE	VERIFIED SIGN / DATE	APPROVED SIGN / DATE
C	STAGE 2R ISSUE	PJ 03/03	NJ 03/03	KC 03/03
B	STAGE 2 ISSUE	PJ 11/11	NJ 11/11	KC 11/11
A	STAGE 1 ISSUE	PJ 05/08	NJ 05/08	KC 05/08

CO-ORDINATE SYSTEM: *MGA Zone 56* HEIGHT DATUM: *A.H.D.* SCALE: *As indicated @ A1*

CapitalMetro ACT Government

CANBERRA METRO Move | Live | Grow

This drawing is confidential and shall only be used for the purpose of this project. The signing of this title block confirms the design and drafting of this project have been prepared and checked in accordance with the Architectus quality assurance system to ISO 9001-2008.

architectus™

DRAWN	PAUL JENKINS	03/03/2017
DESIGNED	PAUL JENKINS	03/03/2017
DRG CHECK	NIGEL JUSTINS	03/03/2017
DESIGN CHECK	TRENT RUSSELL	03/03/2017
APPROVED	KEVIN CURRUCAN	03/03/2017

CAPITAL METRO PROJECT

PACKAGE 55 - TYPICAL DETAILS

ARCHITECTURAL PLATFORM ELEMENTS

TYPICAL PLATFORM BENCH SEATING - DETAILS

FILE No. 160117 SHEET: OF A1

STATUS: STAGE 2R ©

DRG No. 03-ARC-DRW-ARC-SP-8601 C EDMS No.

DF 801*554

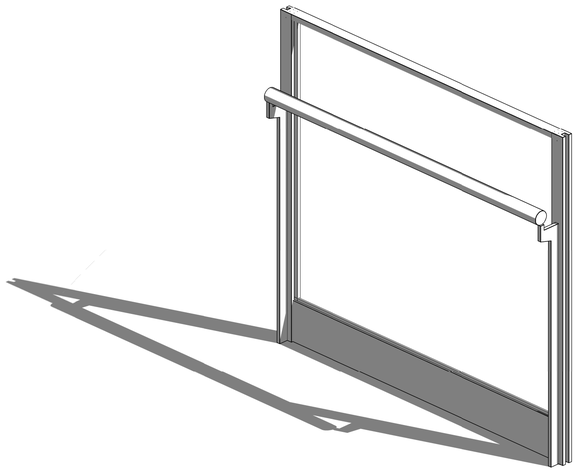

1 DETAIL - BALUSTRADE 3D
Scale:

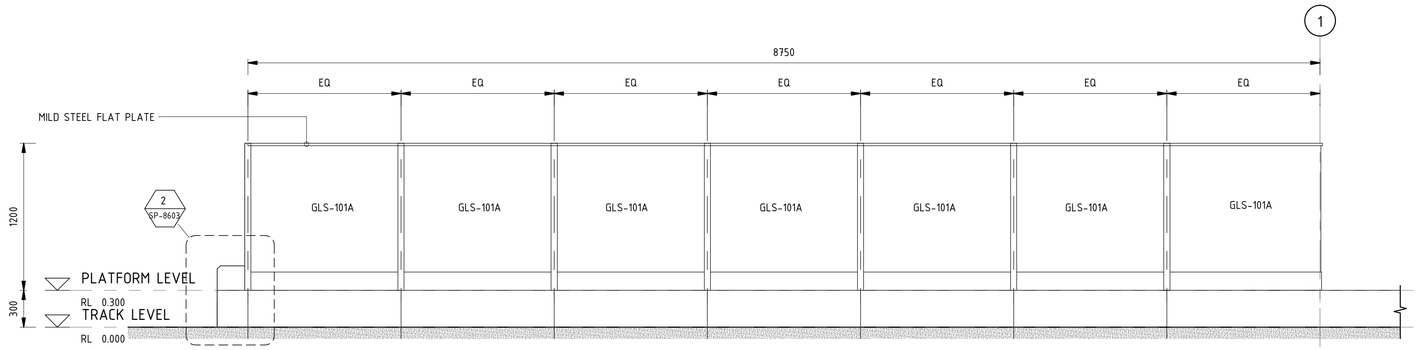

3 ELEVATION - SIDE PLATFORM BALUSTRADE
Scale: 1 : 25

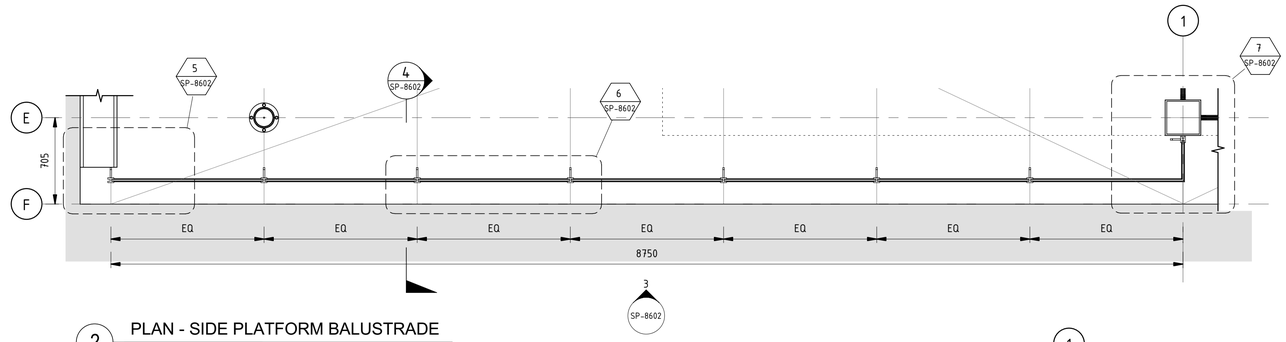

2 PLAN - SIDE PLATFORM BALUSTRADE
Scale: 1 : 25

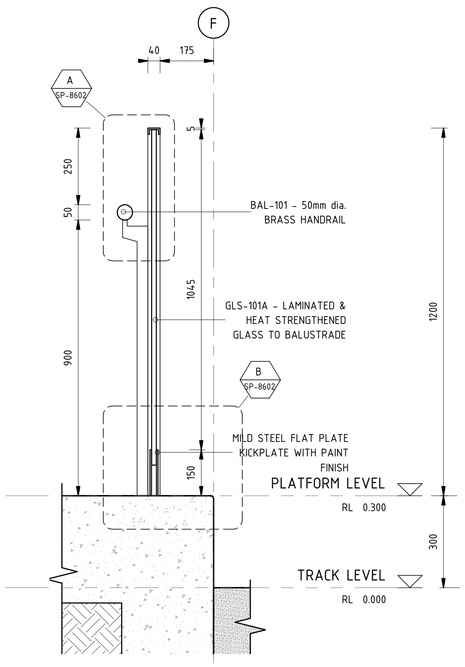

4 SECTION - PLATFORM BALUSTRADE (TYP)
Scale: 1 : 10

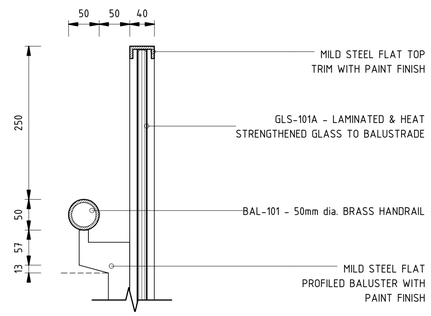

A SECTION DETAIL - BALUSTRADE TOP
Scale: 1 : 5

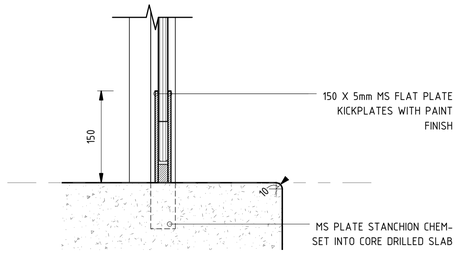

B SECTION DETAIL - BALUSTRADE BASE
Scale: 1 : 5

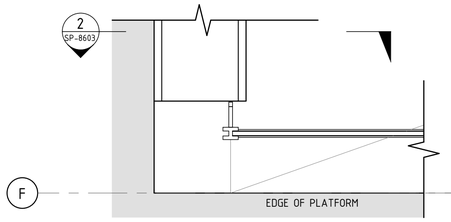

5 PLAN DETAIL - BALUSTRADE END
Scale: 1 : 10

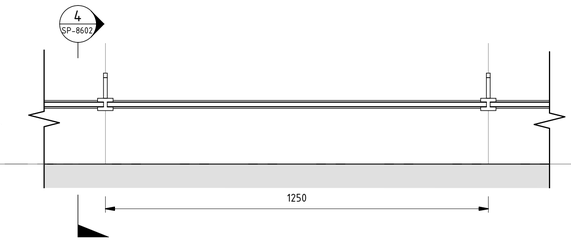

6 PLAN DETAIL - BALUSTRADE PANEL
Scale: 1 : 10

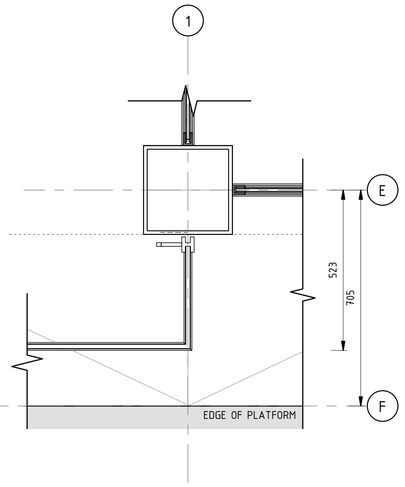

7 PLAN DETAIL - BALUSTRADE / COLUMN
Scale: 1 : 10

DRAWING COLOUR CODED - PRINT ALL COPIES IN COLOUR

SCALES AT A1 SIZE DRAWING

1:10 @ A1 0 100 200 300 400 500 mm

1:5 @ A1 0 50 100 150 200 250 mm

AMD	DESCRIPTION	DESIGNER SIGN / DATE	VERIFIED SIGN / DATE	APPROVED SIGN / DATE
C	STAGE 2R ISSUE	PJ 03/03	NJ 03/03	KC 03/03
B	STAGE 2 ISSUE	PJ 11/11	NJ 11/11	KC 11/11
A	STAGE 1 ISSUE	PJ 05/08	NJ 05/08	KC 05/08

CO-ORDINATE SYSTEM: *MGA Zone 56* HEIGHT DATUM: *A.H.D.* SCALE: *As indicated @ A1*

CapitalMetro ACT Government

CANBERRA METRO Move | Live | Grow

This drawing is confidential and shall only be used for the purpose of this project. The signing of this title block confirms the design and drafting of this project have been prepared and checked in accordance with the Architectus quality assurance system to ISO 9001-2008.

architectus™

DRAWN	PAUL JENKINS	03/03/2017
DESIGNED	PAUL JENKINS	03/03/2017
DRG CHECK	NIGEL JUSTINS	03/03/2017
DESIGN CHECK	TRENT RUSSELL	03/03/2017
APPROVED	KEVIN CURRUCAN	03/03/2017

CAPITAL METRO PROJECT

PACKAGE 55 - TYPICAL DETAILS

ARCHITECTURAL

PLATFORM ELEMENTS

TYPICAL PLATFORM BALUSTRADE - DETAILS

FILE No. 160117 SHEET: OF A1

STATUS: STAGE 2R ©

DRG No. 03-ARC-DRW-ARC-SP-8602 C EDMS No.

DF 801*554

File Plotted C:\Users\PaulJenkins\Documents\160117_Typical Details_pauljenkins.rvt

Plot Date & Time 3/3/2017 1:15:12 PM

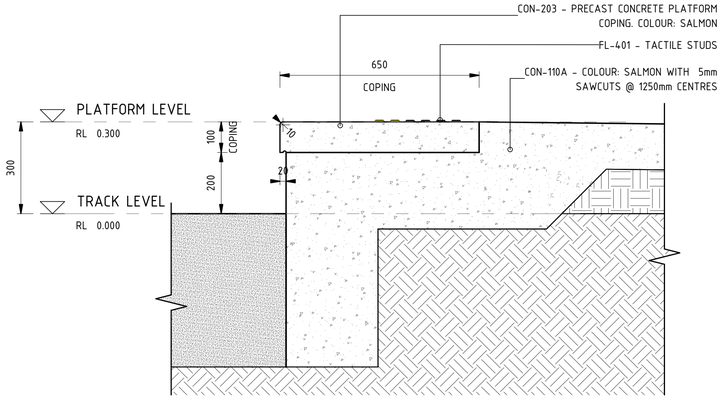

1 DETAIL - PLATFORM EDGE
Scale: 1 : 10

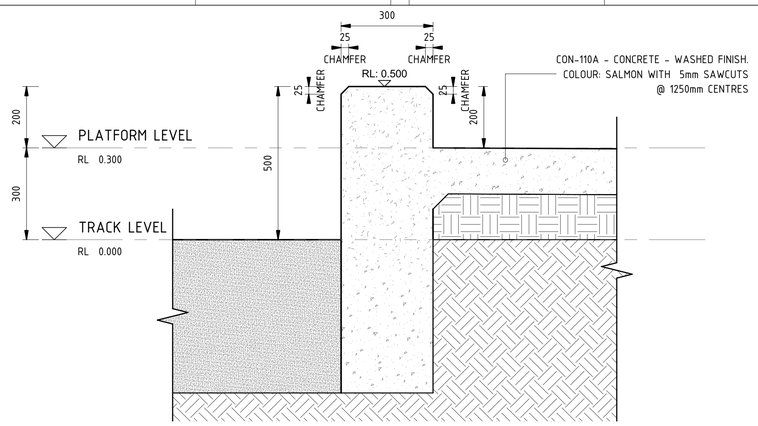

2 DETAIL - PLATFORM HOB
Scale: 1 : 10

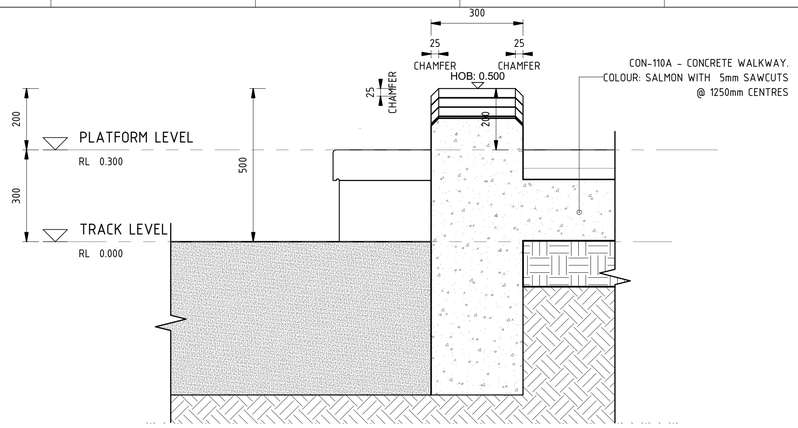

3 DETAIL - PLATFORM WALWAY HOB
Scale: 1 : 10

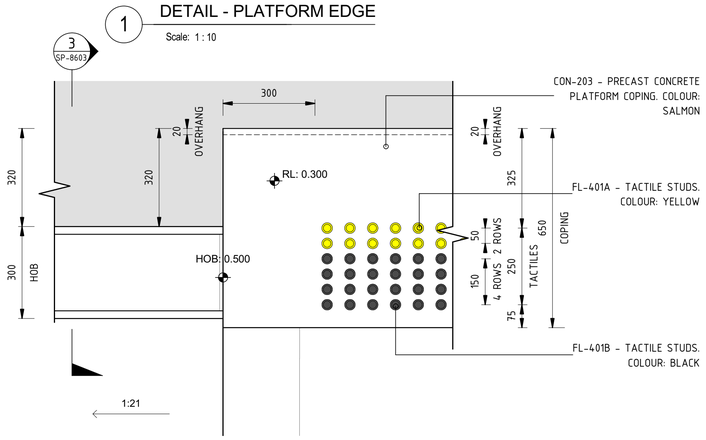

4 DETAIL - PLATFORM TACTILES AT WALKWAY
Scale: 1 : 10

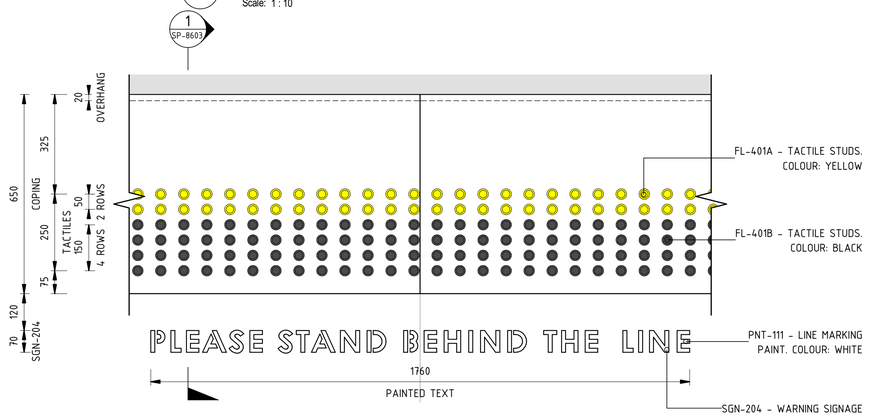

5 DETAIL - PLATFORM TACTILES
Scale: 1 : 10

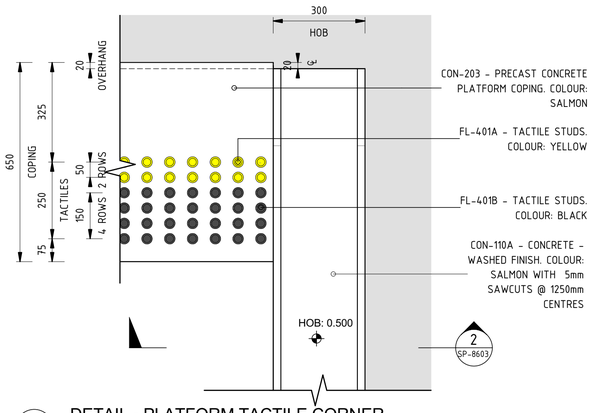

6 DETAIL - PLATFORM TACTILE CORNER
Scale: 1 : 10

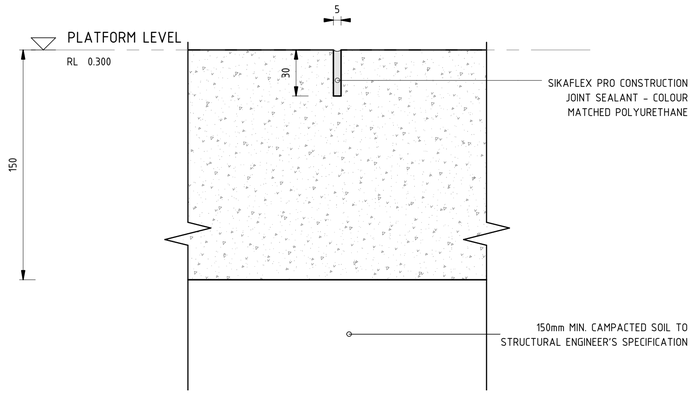

7 DETAIL - SLAB CONTROL JOINT
Scale: 1 : 2

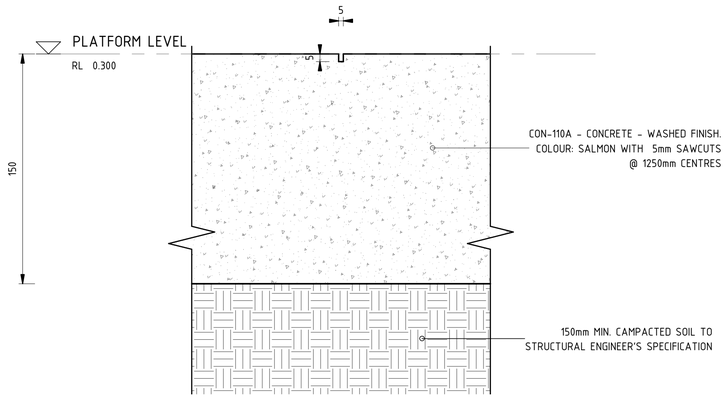

8 DETAIL - SLAB SAWCUT
Scale: 1 : 2

DRAWING COLOUR CODED - PRINT ALL COPIES IN COLOUR

SCALES AT A1 SIZE DRAWING

1:10 @ A1 0 100 200 300 400 500 mm

N

AMD	DESCRIPTION	DESIGNER SIGN / DATE	VERIFIED SIGN / DATE	APPROVED SIGN / DATE
C	STAGE 2R ISSUE	PJ 03/03	NJ 03/03	KC 03/03
B	STAGE 2 ISSUE	PJ 11/11	NJ 11/11	KC 11/11
A	STAGE 1 ISSUE	PJ 05/08	NJ 05/08	KC 05/08

CO-ORDINATE SYSTEM: *MGA Zone 56* HEIGHT DATUM: *A.H.D.* SCALE: *As indicated @ A1*

CapitalMetro ACT Government

CANBERRA METRO Move | Live | Grow

This drawing is confidential and shall only be used for the purpose of this project. The signing of this title block confirms the design and drafting of this project have been prepared and checked in accordance with the Architectus quality assurance system to ISO 9001-2008.

architectus™

DRAWN	PAUL JENKINS	03/03/2017
DESIGNED	PAUL JENKINS	03/03/2017
DRG CHECK	NIGEL JUSTINS	03/03/2017
DESIGN CHECK	TRENT RUSSELL	03/03/2017
APPROVED	KEVIN CURRUCAN	03/03/2017

CAPITAL METRO PROJECT

PACKAGE 55 - TYPICAL DETAILS

ARCHITECTURAL PLATFORM ELEMENTS

TYPICAL PLATFORM SLAB - DETAILS

FILE No. 160117 SHEET: OF A1

STATUS: STAGE 2R ©

DRG No. 03-ARC-DRW-ARC-SP-8603 C EDMS No.

DF 801*554

File Plotted C:\Users\PaulJenkins\Documents\160117_Typical Details_pauljenkins.rvt

Plot Date & Time 3/3/2017 1:15:56 PM