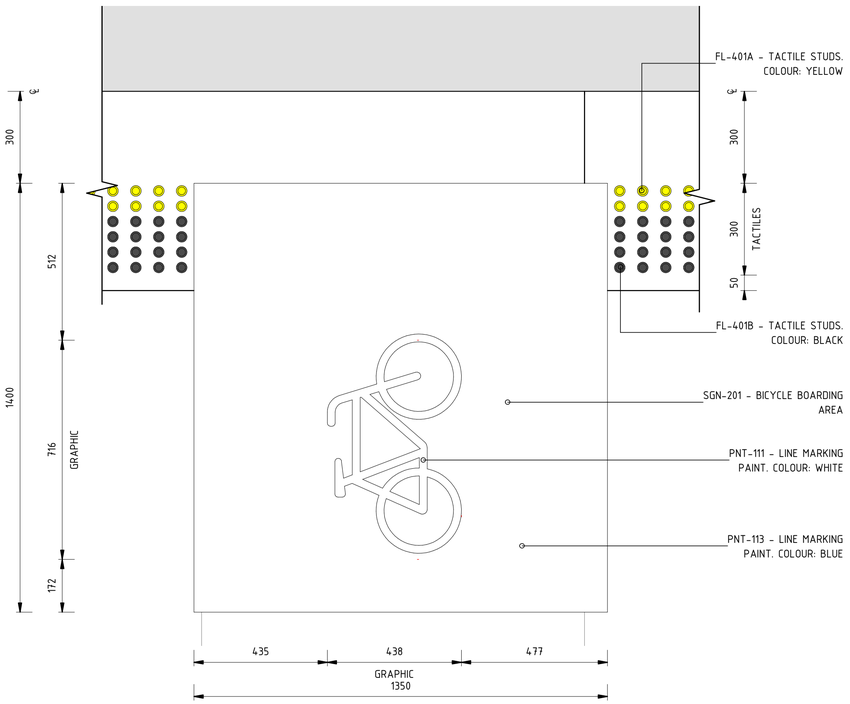

1 SGN-201 - GRAPHIC BICYCLE

Scale: 1 : 10

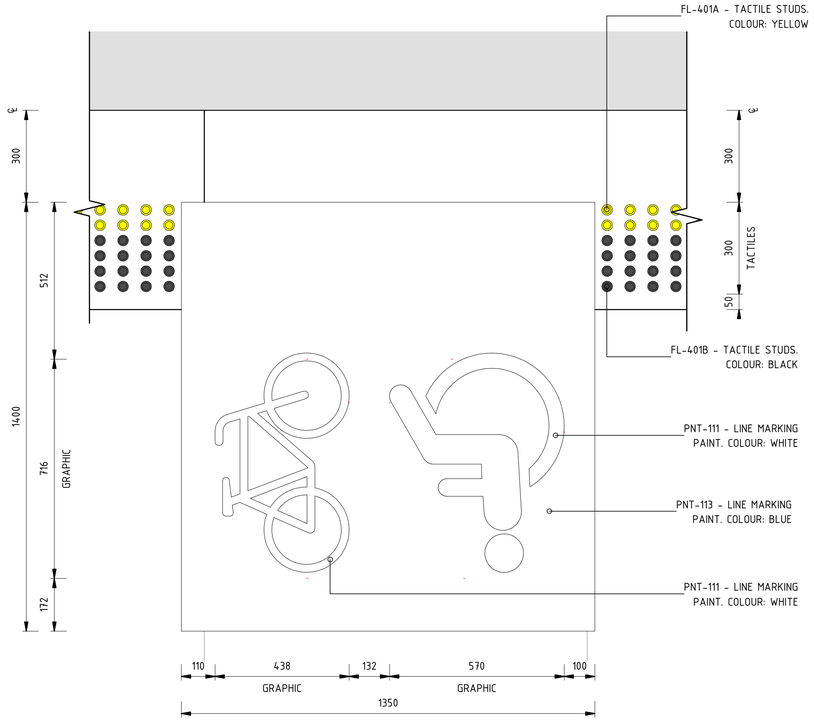

2 SGN-202 - GRAPHIC BICYCLE/WHEELCHAIR

Scale: 1 : 10

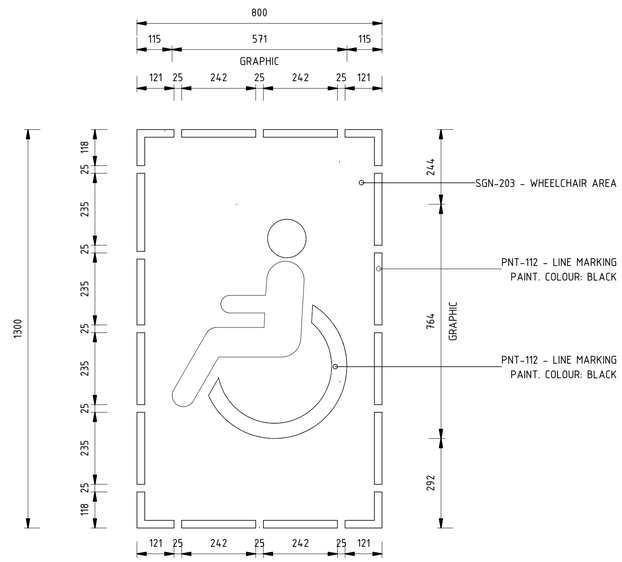

3 SGN-203 - GRAPHIC WHEELCHAIR

Scale: 1 : 10

File Plotted C:\Users\PaulJenkins\Documents\160117_Typical Details_pauljenkins.rvt

Plot Date & Time 3/3/2017 1:16:12 PM

DRAWING COLOUR CODED - PRINT ALL COPIES IN COLOUR

SCALES AT A1 SIZE DRAWING

1:10 @ A1 0 100 200 300 400 500 mm

AMD	DESCRIPTION	DESIGNER SIGN / DATE	VERIFIED SIGN / DATE	APPROVED SIGN / DATE
B	STAGE 2R ISSUE	PJ 03/03	NJ 03/03	KC 03/03
A	STAGE 2 ISSUE	PJ 11/11	NJ 11/11	KC 11/11

CO-ORDINATE SYSTEM: *MGA Zone 56* | HEIGHT DATUM: *A.H.D.* | SCALE: *1 : 10 @ A1*

CapitalMetro ACT Government

CANBERRA METRO Move | Live | Grow

This drawing is confidential and shall only be used for the purpose of this project. The signing of this title block confirms the design and drafting of this project have been prepared and checked in accordance with the Architectus quality assurance system to ISO 9001-2008.

architectus™

DRAWN	PAUL JENKINS	03/03/2017
DESIGNED	PAUL JENKINS	03/03/2017
DRG CHECK	NIGEL JUSTINS	03/03/2017
DESIGN CHECK	TRENT RUSSELL	03/03/2017
APPROVED	KEVIN CURRUCAN	03/03/2017

CAPITAL METRO PROJECT

PACKAGE 55 - TYPICAL DETAILS

ARCHITECTURAL PLATFORM ELEMENTS

TYPICAL PLATFORM GRAPHICS - DETAILS

FILE No. 160117 | SHEET: OF | A1

STATUS: STAGE 2R | ©

DRG No. 03-ARC-DRW-ARC-SP-8604 | B | EDMS No.

DF 801*554

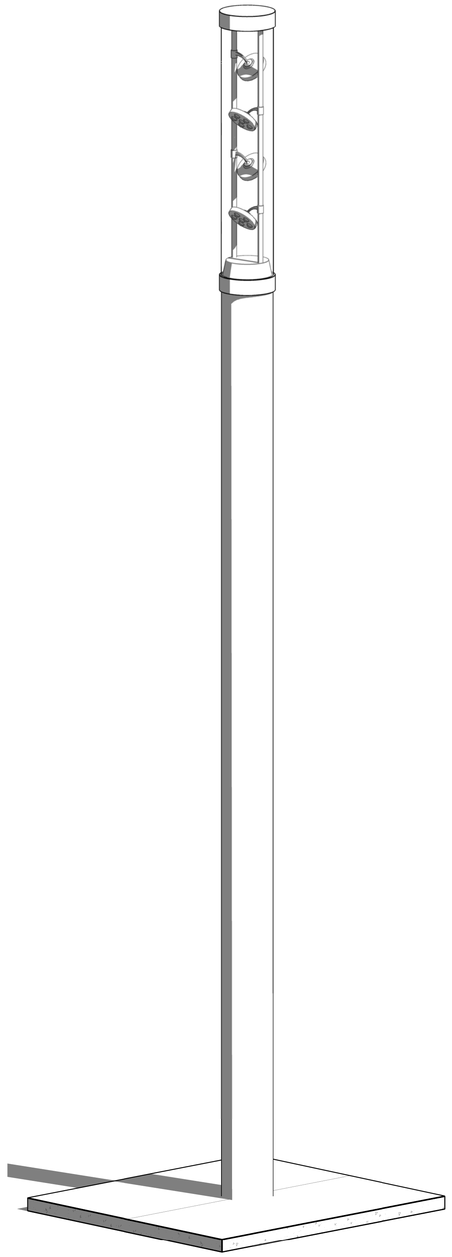

1 DETAIL - LIGHT POLE 3D

Scale:

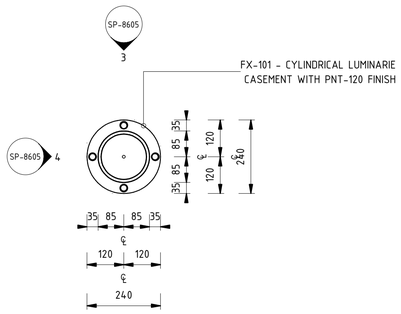

2 DETAIL - PLAN

Scale: 1 : 10

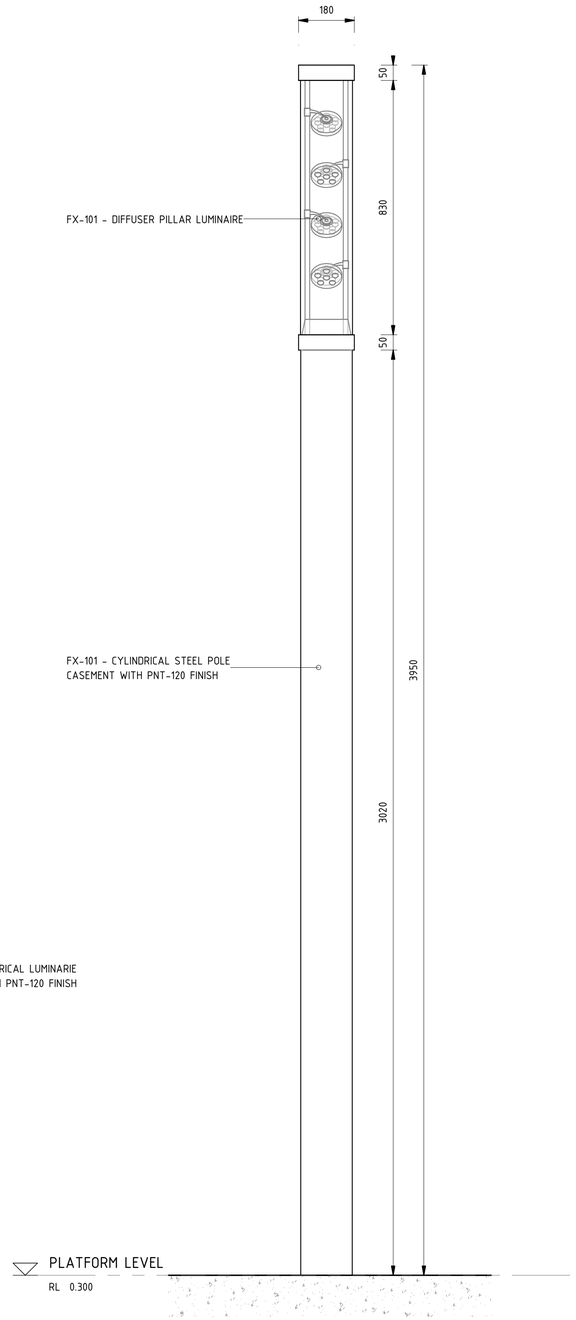

3 DETAIL - FRONT ELEVATION

Scale: 1 : 10

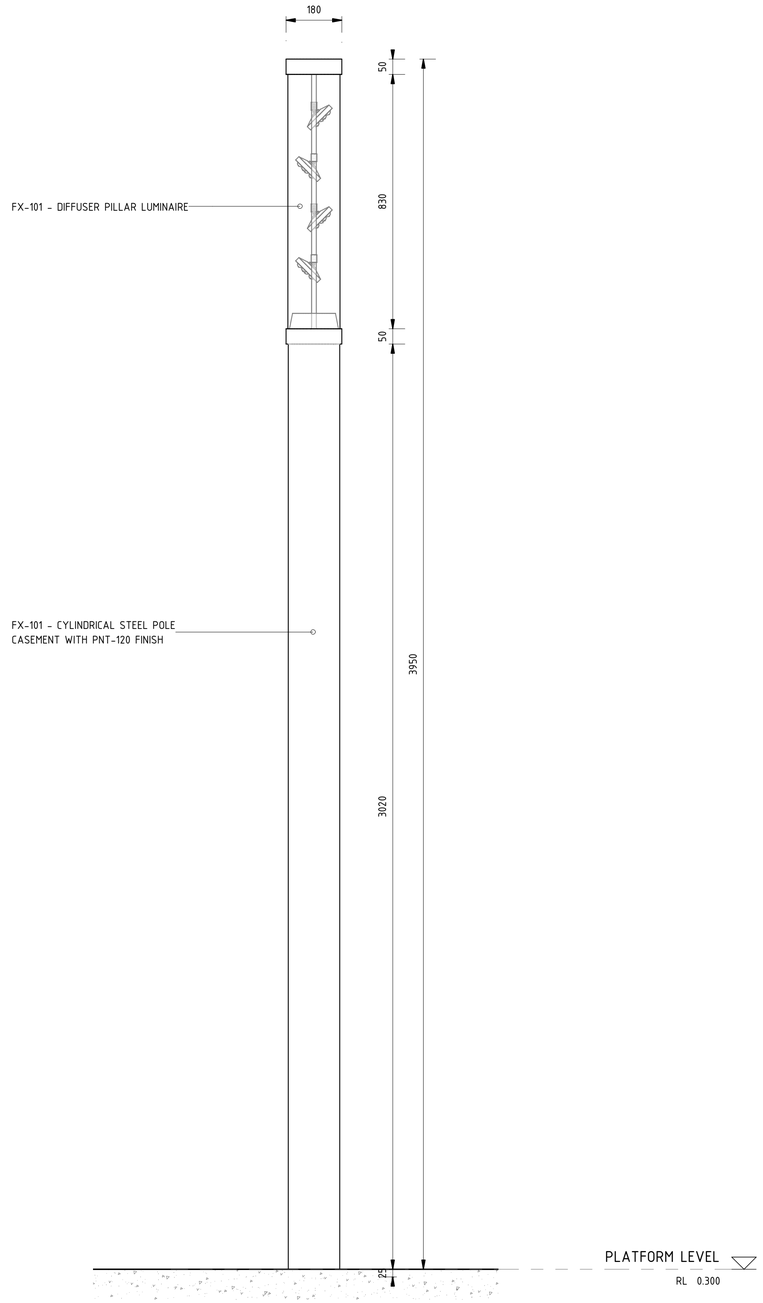

4 DETAIL - SIDE ELEVATION

Scale: 1 : 10

DRAWING COLOUR CODED - PRINT ALL COPIES IN COLOUR

SCALES AT A1 SIZE DRAWING

1:10 @ A1 0 100 200 300 400 500 mm

AMD	DESCRIPTION	DESIGNER SIGN / DATE	VERIFIED SIGN / DATE	APPROVED SIGN / DATE
B	STAGE 2R ISSUE	PJ 03/03	NJ 03/03	KC 03/03
A	STAGE 2 ISSUE	PJ 11/11	NJ 11/11	KC 11/11

CO-ORDINATE SYSTEM: *MGA Zone 56* HEIGHT DATUM: *A.H.D.* SCALE: *1 : 10 @ A1*

CapitalMetro ACT Government

CANBERRA METRO Move | Live | Grow

This drawing is confidential and shall only be used for the purpose of this project. The signing of this title block confirms the design and drafting of this project have been prepared and checked in accordance with the Architectus quality assurance system to ISO 9001-2008.

architectus™

DRAWN	PAUL JENKINS	03/03/2017
DESIGNED	PAUL JENKINS	03/03/2017
DRG CHECK	NIGEL JUSTINS	03/03/2017
DESIGN CHECK	TRENT RUSSELL	03/03/2017
APPROVED	KEVIN CURRUCAN	03/03/2017

CAPITAL METRO PROJECT

PACKAGE 55 - TYPICAL DETAILS

ARCHITECTURAL PLATFORM ELEMENTS

TYPICAL PLATFORM LIGHT POLE - DETAILS

FILE No. 160117 SHEET: OF A1

STATUS: STAGE 2R ©

DRG No. 03-ARC-DRW-ARC-SP-8605 B EDMS No.

DF 801*554

File Plotted C:\Users\PaulJenkins\Documents\160117_Typical Details_pauljenkins.rvt

Plot Date & Time 3/3/2017 1:16:22 PM

DASHED LINE INDICATES OUTLINE OF POLE WHEN LOWERED

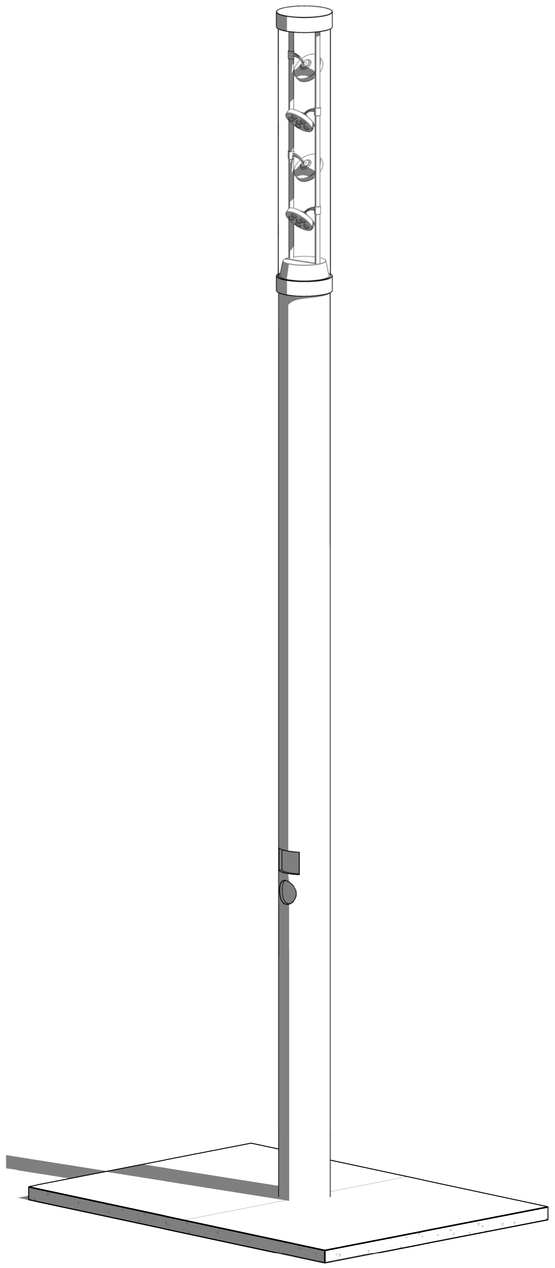

1 DETAIL - LIGHT POLE FLR_3D

Scale:

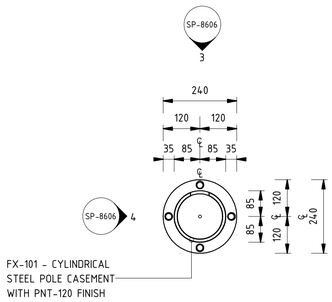

2 DETAIL - PLAN

Scale: 1 : 10

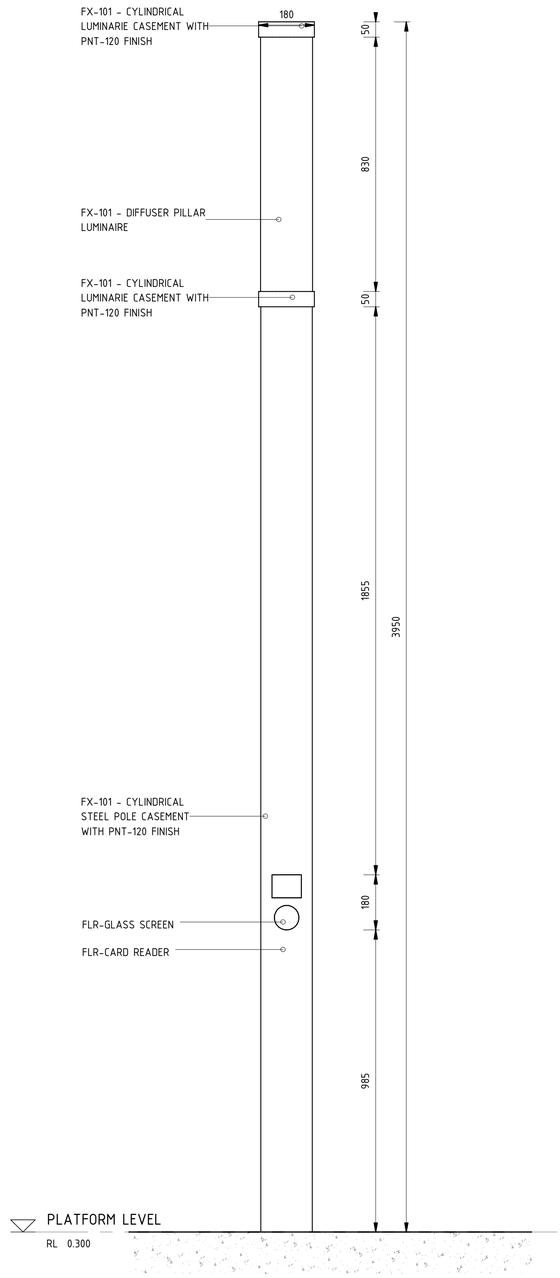

3 DETAIL - FRONT ELEVATION

Scale: 1 : 10

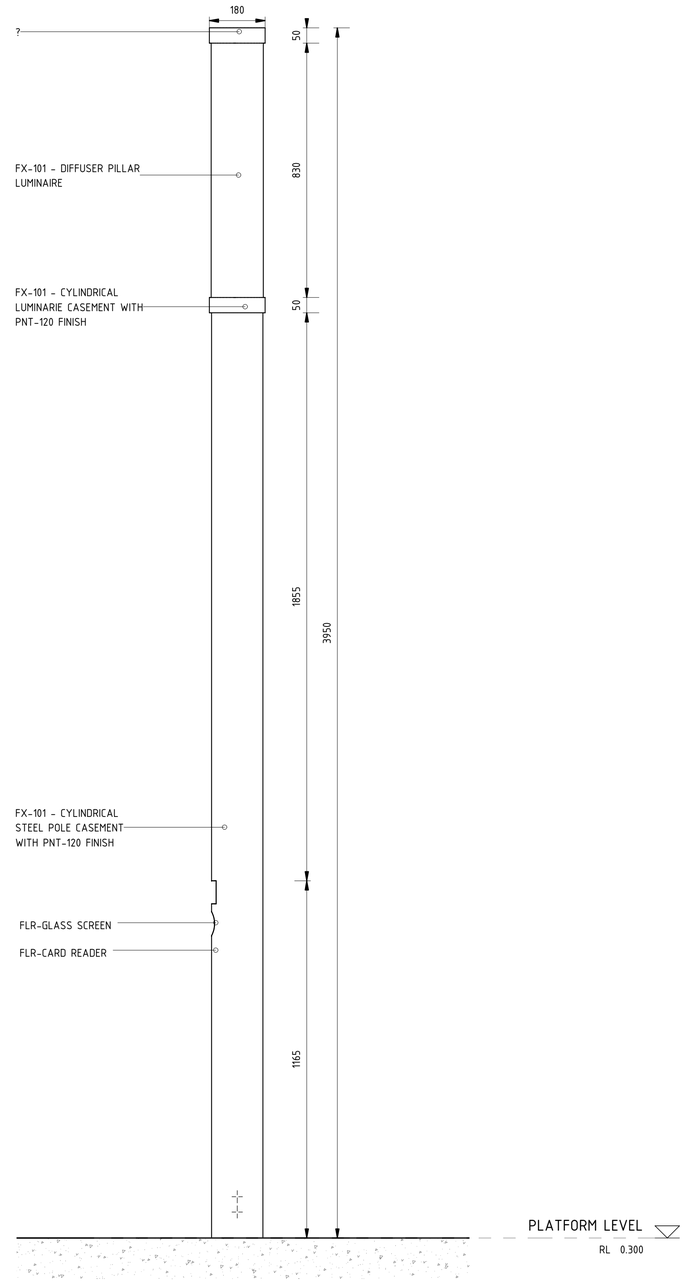

4 DETAIL - SIDE ELEVATION

Scale: 1 : 10

DRAWING COLOUR CODED - PRINT ALL COPIES IN COLOUR

1:10 @ A1 0 100 200 300 400 500 mm

AMD	DESCRIPTION	DESIGNER SIGN / DATE	VERIFIED SIGN / DATE	APPROVED SIGN / DATE
A	STAGE 2R ISSUE	PJ 03/03	NJ 03/03	KC 03/03

CO-ORDINATE SYSTEM: *MGA Zone 56* | HEIGHT DATUM: *A.H.D.* | SCALE: *1 : 10 @ A1*

CapitalMetro ACT Government

CANBERRA METRO Move | Live | Grow

This drawing is confidential and shall only be used for the purpose of this project. The signing of this title block confirms the design and drafting of this project have been prepared and checked in accordance with the Architectus quality assurance system to ISO 9001-2008.

architectus™

DRAWN	PAUL JENKINS	03/03/2017
DESIGNED	PAUL JENKINS	03/03/2017
DRG CHECK	NIGEL JUSTINS	03/03/2017
DESIGN CHECK	TRENT RUSSELL	03/03/2017
APPROVED	KEVIN CURRUCAN	03/03/2017

CAPITAL METRO PROJECT

PACKAGE 55 - TYPICAL DETAILS

ARCHITECTURAL PLATFORM ELEMENTS

TYPICAL PLATFORM LIGHT POLE & FLR - DETAILS

FILE No. 160117 | SHEET: OF | A1

STATUS: STAGE 2R | ©

DRG No. 03-ARC-DRW-ARC-SP-8606 | A | EDMS No.

DF 801*554

File Plotted C:\Users\PaulJenkins\Documents\160117_Typical Details_pauljenkins.rvt

Plot Date & Time 3/3/2017 1:16:59 PM

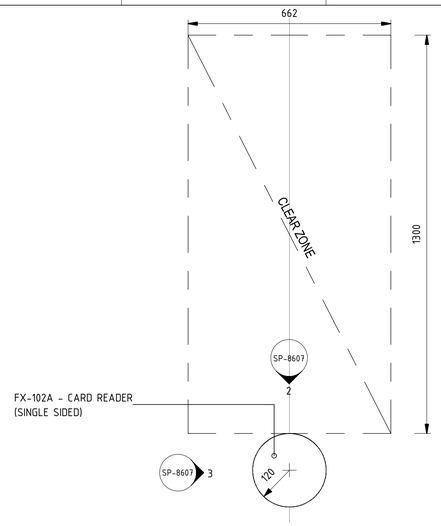

1 SINGLE CARD READER - PLAN

Scale: 1 : 10

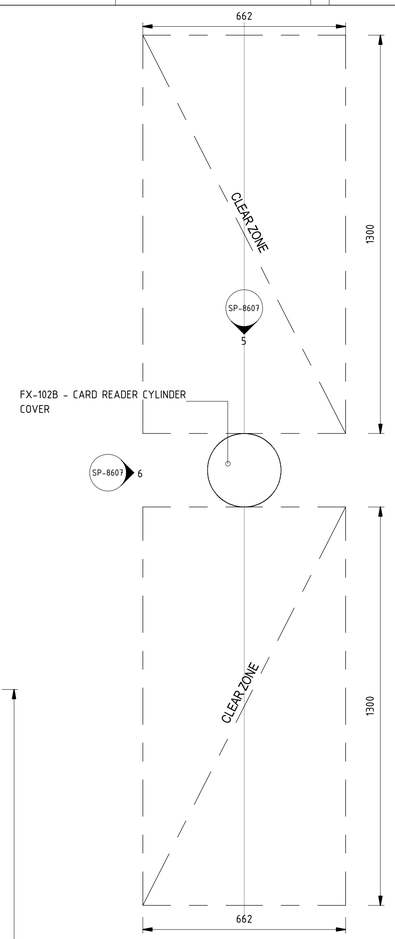

4 DOUBLE CARD READER - PLAN

Scale: 1 : 10

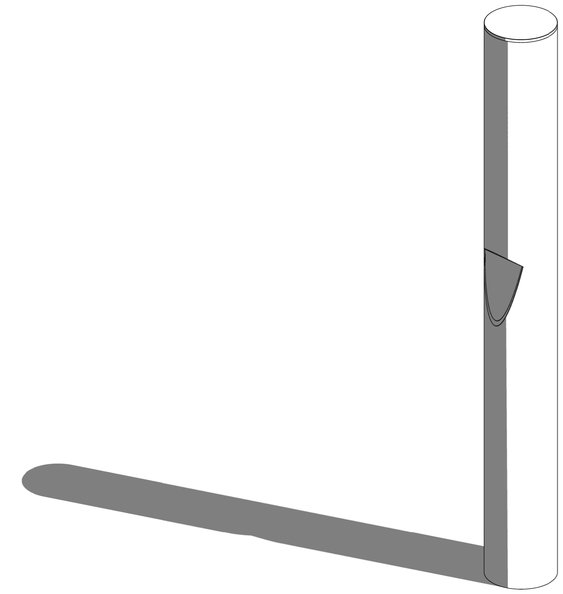

7 DETAIL - CARD READER 3D

Scale:

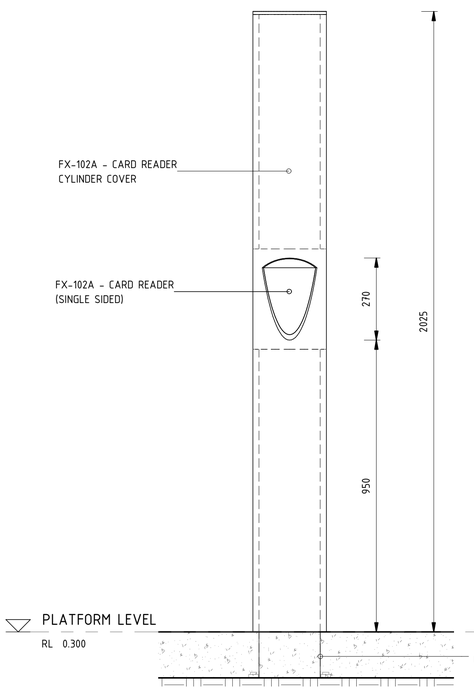

2 SINGLE CARD READER - FRONT ELEVATION

Scale: 1 : 10

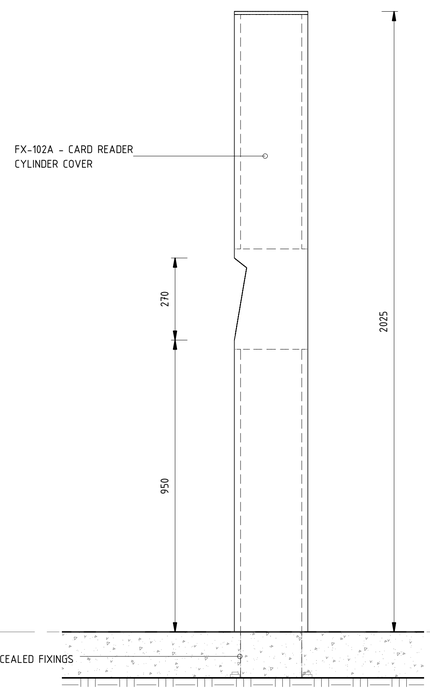

3 SINGLE CARD READER - SIDE ELEVATION

Scale: 1 : 10

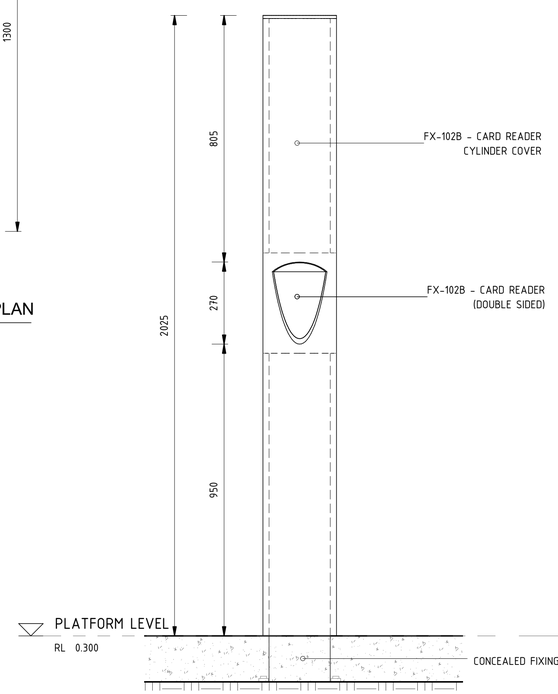

5 DOUBLE CARD READER FRONT ELEVATION

Scale: 1 : 10

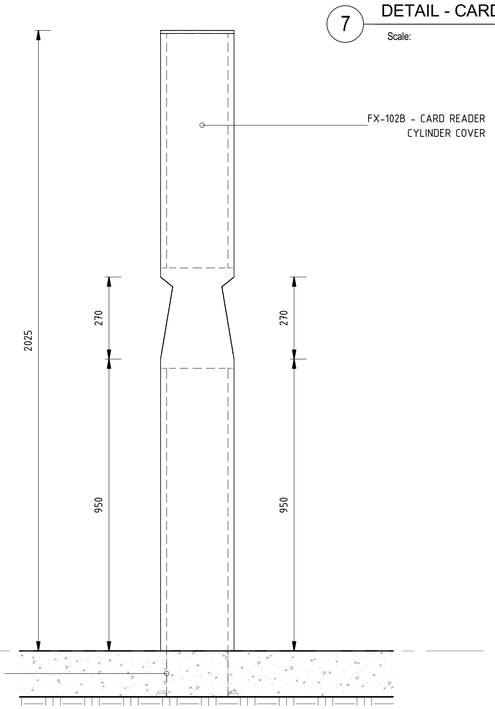

6 DOUBLE CARD READER SIDE ELEVATION

Scale: 1 : 10

File Plotted C:\Users\PaulJenkins\Documents\160117_Typical Details_pauljenkins.rvt

Plot Date & Time 3/3/2017 1:17:36 PM

DRAWING COLOUR CODED - PRINT ALL COPIES IN COLOUR

SCALES AT A1 SIZE DRAWING

1:10 @ A1 0 100 200 300 400 500 mm

AMD	DESCRIPTION	DESIGNER SIGN / DATE	VERIFIED SIGN / DATE	APPROVED SIGN / DATE
B	STAGE 2R ISSUE	PJ 03/03	NJ 03/03	KC 03/03
A	STAGE 2 ISSUE	PJ 11/11	NJ 11/11	KC 11/11

CO-ORDINATE SYSTEM: *MGA Zone 56* HEIGHT DATUM: *A.H.D.* SCALE: *1 : 10 @ A1*

CapitalMetro ACT Government

CANBERRA METRO Move | Live | Grow

This drawing is confidential and shall only be used for the purpose of this project. The signing of this title block confirms the design and drafting of this project have been prepared and checked in accordance with the Architectus quality assurance system to ISO 9001-2008.

architectus™

DRAWN	PAUL JENKINS	03/03/2017
DESIGNED	PAUL JENKINS	03/03/2017
DRG CHECK	NIGEL JUSTINS	03/03/2017
DESIGN CHECK	TRENT RUSSELL	03/03/2017
APPROVED	KEVIN CURRUCAN	03/03/2017

CAPITAL METRO PROJECT

PACKAGE 55 - TYPICAL DETAILS

PLATFORM ELEMENTS

TYPICAL PLATFORM CARDER READER - DETAILS

FILE No. 160117 SHEET: OF A1

STATUS: STAGE 2R ©

DRG No. 03-ARC-DRW-ARC-SP-8607 B EDMS No.

DF 801*554

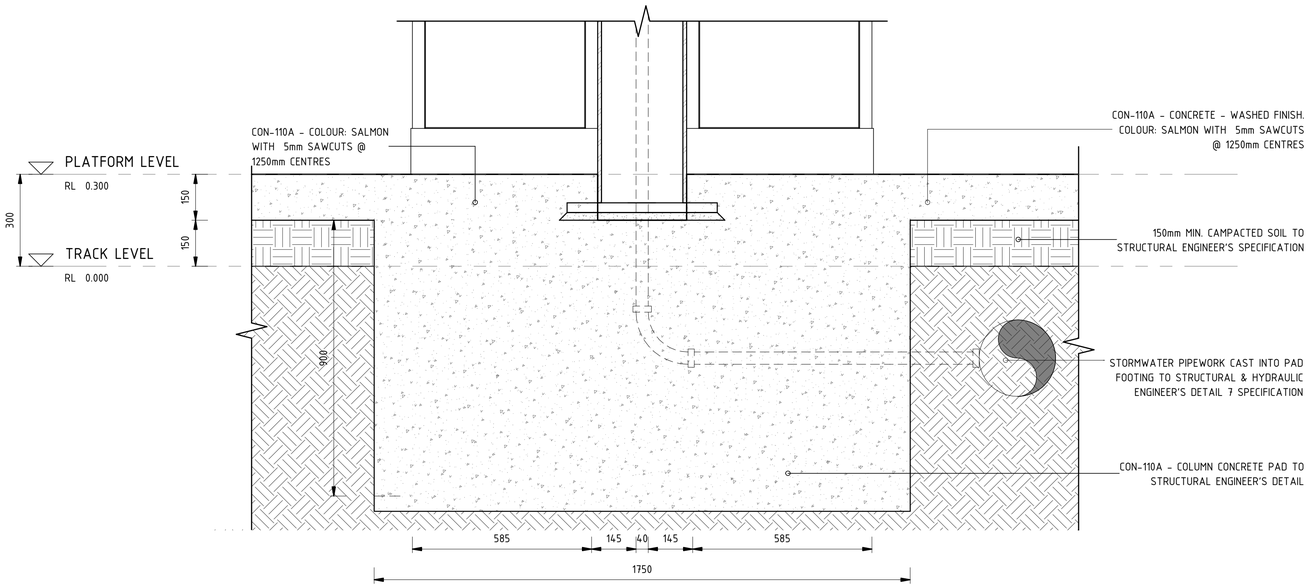

1 DETAIL - TYPICAL COLUMN BASE PAD

Scale: 1 : 10

DRAWING COLOUR CODED - PRINT ALL COPIES IN COLOUR

SCALES AT A1 SIZE DRAWING

1:10 @ A1 0 100 200 300 400 500 mm

AMD	DESCRIPTION	DESIGNER SIGN / DATE	VERIFIED SIGN / DATE	APPROVED SIGN / DATE
A	STAGE 2R ISSUE	PJ 03/03	NJ 03/03	KC 03/03

CO-ORDINATE SYSTEM: *MGA Zone 56* | HEIGHT DATUM: *A.H.D.* | SCALE: *1 : 10 @ A1*

CapitalMetro ACT Government

CANBERRA METRO Move | Live | Grow

This drawing is confidential and shall only be used for the purpose of this project. The signing of this title block confirms the design and drafting of this project have been prepared and checked in accordance with the Architectus quality assurance system to ISO 9001-2008.

architectus™

DRAWN	PAUL JENKINS	03/03/2017
DESIGNED	PAUL JENKINS	03/03/2017
DRG CHECK	NIGEL JUSTINS	03/03/2017
DESIGN CHECK	TRENT RUSSELL	03/03/2017
APPROVED	KEVIN CURRUCAN	03/03/2017

CAPITAL METRO PROJECT

PACKAGE 55 - TYPICAL DETAILS

ARCHITECTURAL

PLATFORM ELEMENTS

TYPICAL STRUCTURAL DETAILS

FILE No. 160117 | SHEET: OF | A1

STATUS: STAGE 2R | ©

DRG No. 03-ARC-DRW-ARC-SP-8608 | A | EDMS No.

DF 801*554

File Plotted C:\Users\PaulJenkins\Documents\160117_Typical Details_pauljenkins.rvt

Plot Date & Time 3/3/2017 1:18:09 PM

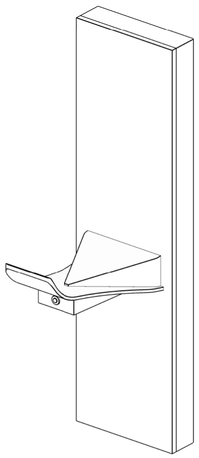

2 DETAIL - DRINKING FOUNTAIN 3D

Scale:

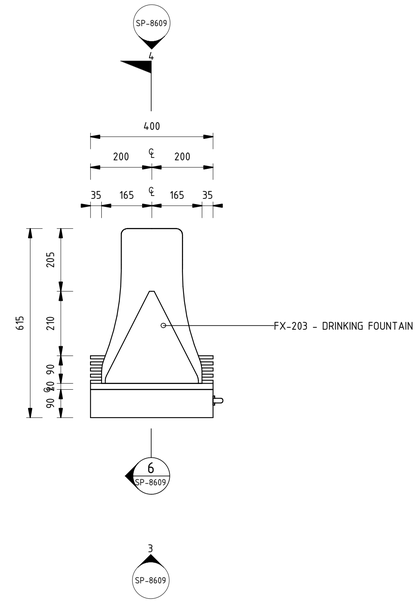

1 DETAIL - DRINKING FOUNTAIN_PLAN

Scale: 1 : 10

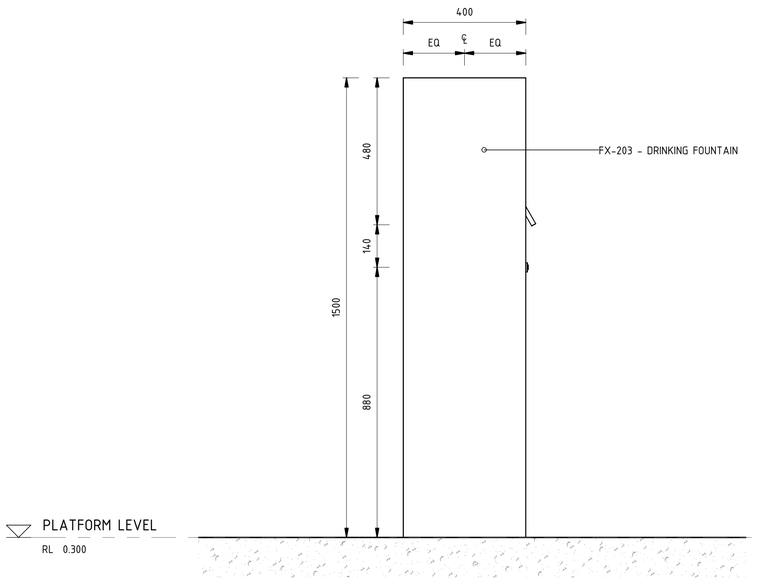

3 DETAIL - DRINKING FOUNTAIN_BACK ELEVATION

Scale: 1 : 10

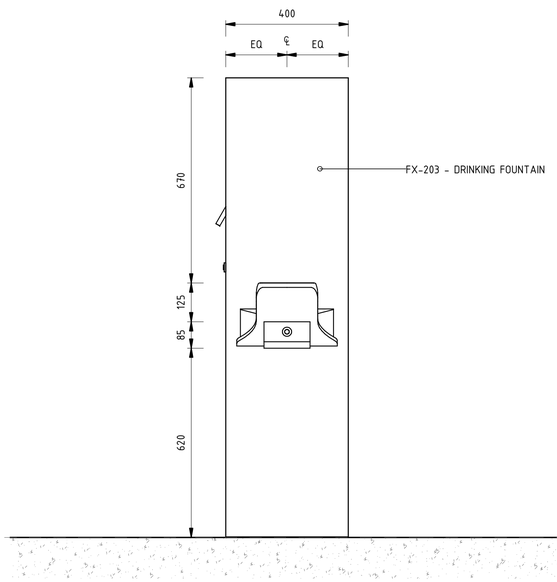

4 DETAIL - DRINKING FOUNTAIN_FRONT ELEVATION

Scale: 1 : 10

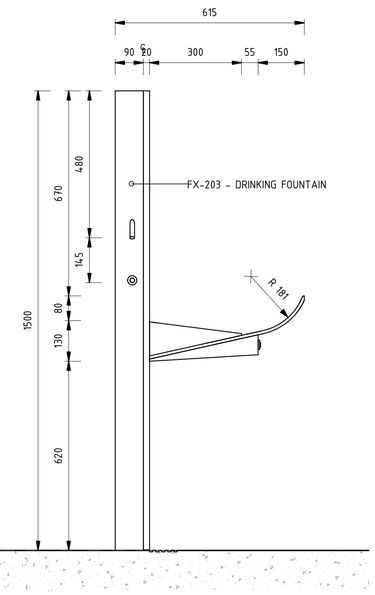

6 DETAIL - DRINKING FOUNTAIN_SIDE SECTION

Scale: 1 : 10

DRAWING COLOUR CODED - PRINT ALL COPIES IN COLOUR

SCALES AT A1 SIZE DRAWING

1:10 @ A1 0 100 200 300 400 500 mm

AMD	DESCRIPTION	DESIGNER SIGN / DATE	VERIFIED SIGN / DATE	APPROVED SIGN / DATE
A	STAGE 2R ISSUE	PJ 03/03	NJ 03/03	KC 03/03

CO-ORDINATE SYSTEM: *MGA Zone 56* | HEIGHT DATUM: *A.H.D.* | SCALE: *1 : 10 @ A1*

CapitalMetro ACT Government

CANBERRA METRO Move | Live | Grow

This drawing is confidential and shall only be used for the purpose of this project. The signing of this title block confirms the design and drafting of this project have been prepared and checked in accordance with the Architectus quality assurance system to ISO 9001-2008.

architectus™

DRAWN	PAUL JENKINS	03/03/2017
DESIGNED	PAUL JENKINS	03/03/2017
DRG CHECK	NIGEL JUSTINS	03/03/2017
DESIGN CHECK	TRENT RUSSELL	03/03/2017
APPROVED	KEVIN CURRUCAN	03/03/2017

CAPITAL METRO PROJECT

PACKAGE 55 - TYPICAL DETAILS

ARCHITECTURAL PLATFORM ELEMENTS

TYPICAL DRINKING FOUNTAIN

FILE No. 160117 | SHEET: OF | A1

STATUS: STAGE 2R | ©

DRG No. 03-ARC-DRW-ARC-SP-8609 | A | EDMS No.

DF 801*554

File Plotted C:\Users\PaulJenkins\Documents\160117_Typical Details_pauljenkins.rvt

Plot Date & Time 3/3/2017 11:18:19 PM

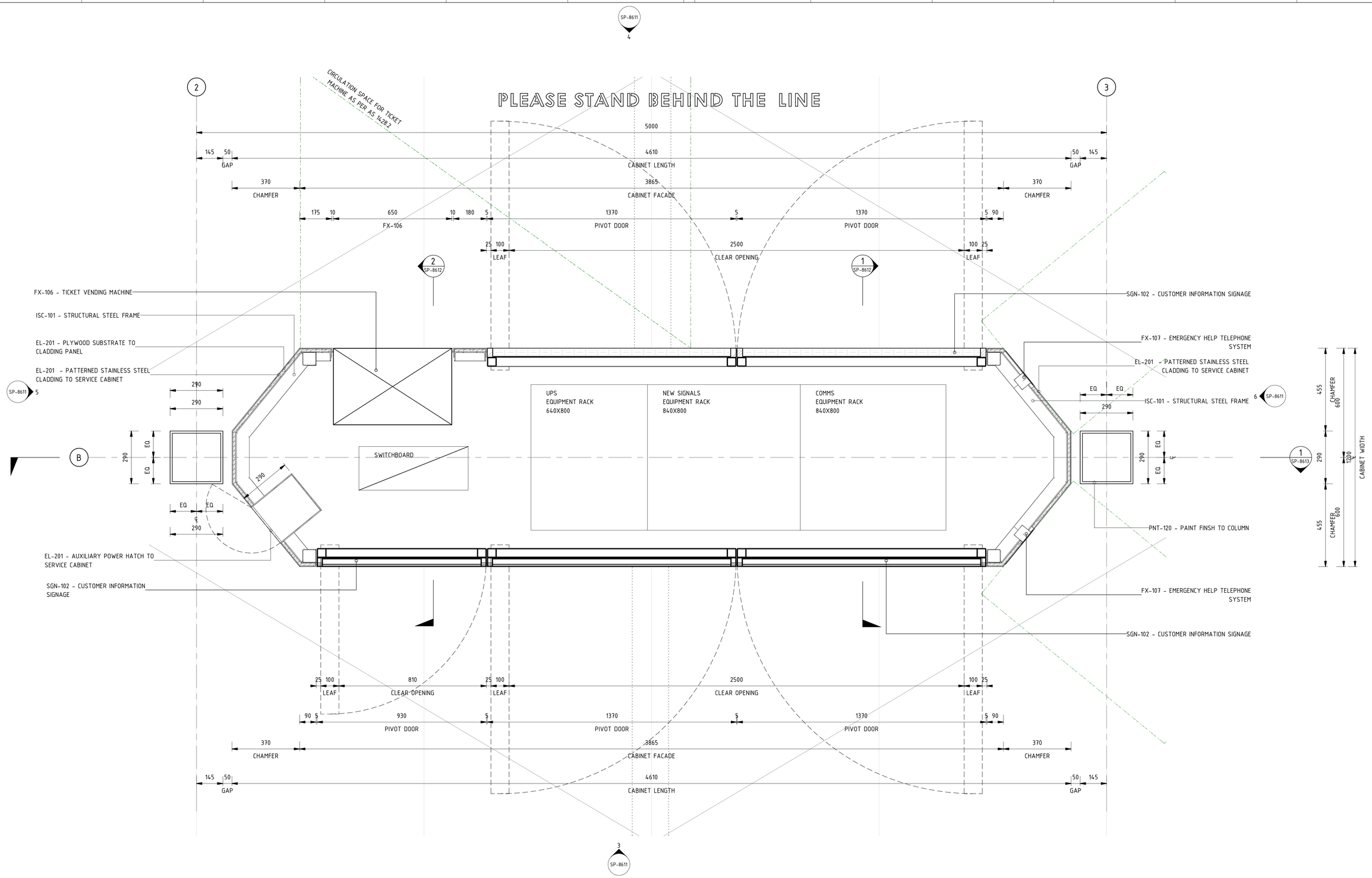

DRAWING COLOUR CODED - PRINT ALL COPIES IN COLOUR

SCALES AT A1 SIZE DRAWING

1:10 @ A1 0 100 200 300 400 500 mm

AMD	DESCRIPTION	DESIGNER SIGN / DATE	VERIFIED SIGN / DATE	APPROVED SIGN / DATE
B	STAGE 2R ISSUE	PJ 03/03	NJ 03/03	KC 03/03
A	STAGE 2 ISSUE	PJ 11/11	NJ 11/11	KC 11/11

CO-ORDINATE SYSTEM: *MGA Zone 56* HEIGHT DATUM: *A.H.D.* SCALE: *1 : 10 @ A1*

CapitalMetro ACT Government

CANBERRA METRO Move | Live | Grow

This drawing is confidential and shall only be used for the purpose of this project. The signing of this title block confirms the design and drafting of this project have been prepared and checked in accordance with the Architectus quality assurance system to ISO 9001-2008.

architectus™

DRAWN	PAUL JENKINS	03/03/2017
DESIGNED	PAUL JENKINS	03/03/2017
DRG CHECK	NIGEL JUSTINS	03/03/2017
DESIGN CHECK	TRENT RUSSELL	03/03/2017
APPROVED	KEVIN CURRUCAN	03/03/2017

CAPITAL METRO PROJECT

PACKAGE 55 - TYPICAL DETAILS

ARCHITECTURAL

INTEGRATED SERVICES CABINETS

TYPICAL ISLAND CABINET - PLAN

FILE No. 160117 SHEET: OF A1

STATUS: STAGE 2R ©

DRG No. 03-ARC-DRW-ARC-SP-8610 B EDMS No.

DF 801*554

File Plotted C:\Users\PaulJenkins\Documents\160117_Typical Details_pauljenkins.rvt

Plot Date & Time 3/3/2017 1:18:52 PM

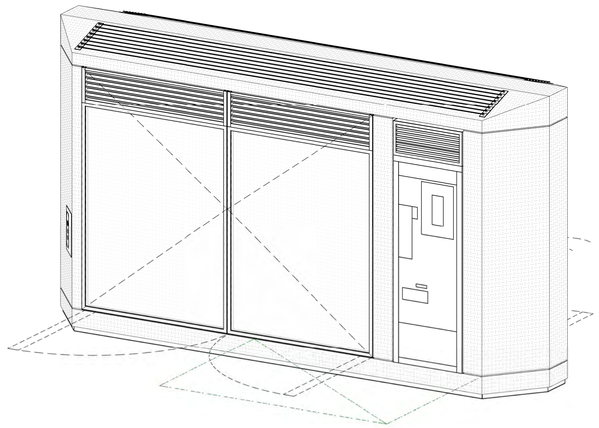

1 DETAIL - ISLAND CABINET 3D

Scale:

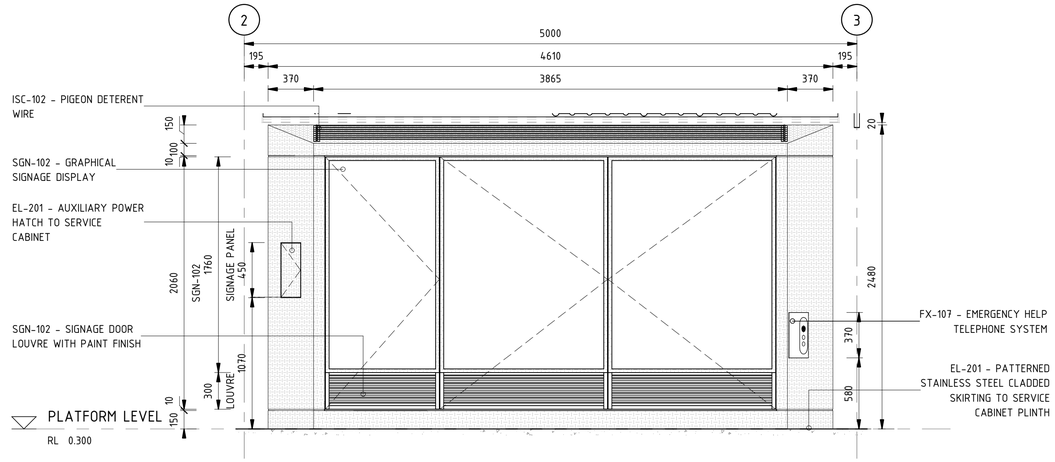

3 ISLAND I/S CABINET - ELEVATION 01

Scale: 1 : 25

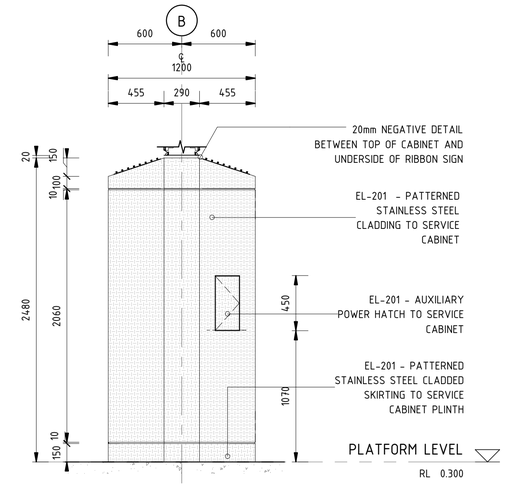

5 ISLAND I/S CABINET - ELEVATION 02

Scale: 1 : 25

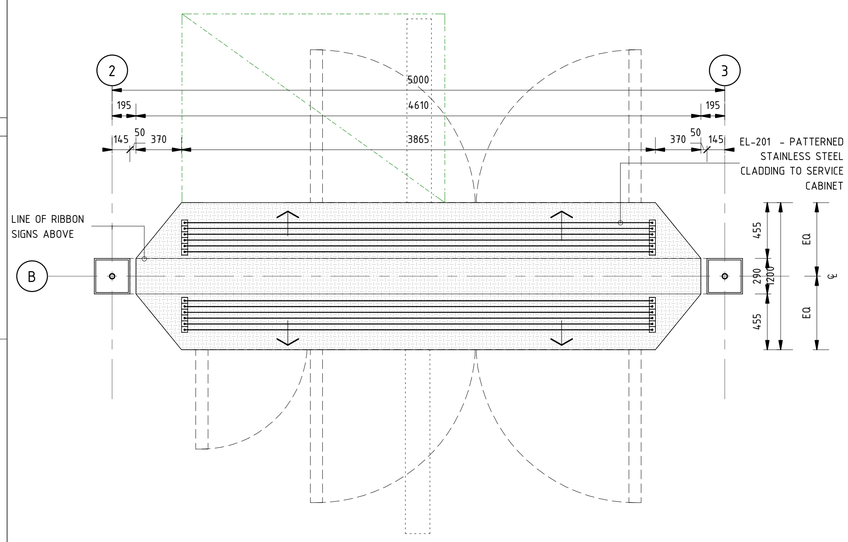

2 PLAN DETAIL - ISLAND ISC CABINET (TOP)

Scale: 1 : 25

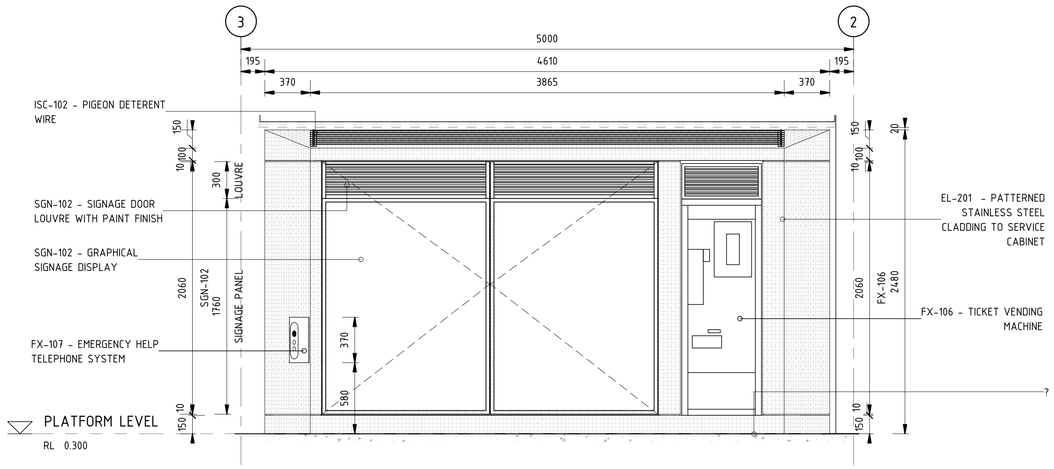

4 ISLAND I/S CABINET - ELEVATION 03

Scale: 1 : 25

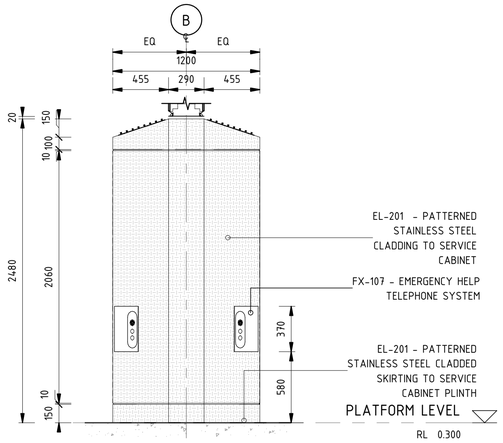

6 ISLAND I/S CABINET - ELEVATION 04

Scale: 1 : 25

DRAWING COLOUR CODED - PRINT ALL COPIES IN COLOUR

SCALES AT A1 SIZE DRAWING

1:25 @ A1 0 250 500 750 1000 1250 mm

AMD	DESCRIPTION	DESIGNER SIGN / DATE	VERIFIED SIGN / DATE	APPROVED SIGN / DATE
B	STAGE 2R ISSUE	PJ 03/03	NJ 03/03	KC 03/03
A	STAGE 2 ISSUE	PJ 11/11	NJ 11/11	KC 11/11

CO-ORDINATE SYSTEM: *MGA Zone 56* HEIGHT DATUM: *A.H.D.* SCALE: *1 : 25 @ A1*

CapitalMetro ACT Government

CANBERRA METRO Move | Live | Grow

This drawing is confidential and shall only be used for the purpose of this project. The signing of this title block confirms the design and drafting of this project have been prepared and checked in accordance with the Architectus quality assurance system to ISO 9001-2008.

architectus™

DRAWN	PAUL JENKINS	03/03/2017
DESIGNED	PAUL JENKINS	03/03/2017
DRG CHECK	NIGEL JUSTINS	03/03/2017
DESIGN CHECK	TRENT RUSSELL	03/03/2017
APPROVED	KEVIN CURRUCAN	03/03/2017

CAPITAL METRO PROJECT

PACKAGE 55 - TYPICAL DETAILS

ARCHITECTURAL

INTEGRATED SERVICES CABINETS

TYPICAL ISLAND CABINET - ELEVATIONS

FILE No. 160117 SHEET: OF A1

STATUS: STAGE 2R ©

DRG No. 03-ARC-DRW-ARC-SP-8611 B EDMS No.

DF 801*554

File Plotted C:\Users\PaulJenkins\Documents\160117_Typical Details_pauljenkins.rvt

Plot Date & Time 3/3/2017 1:19:04 PM

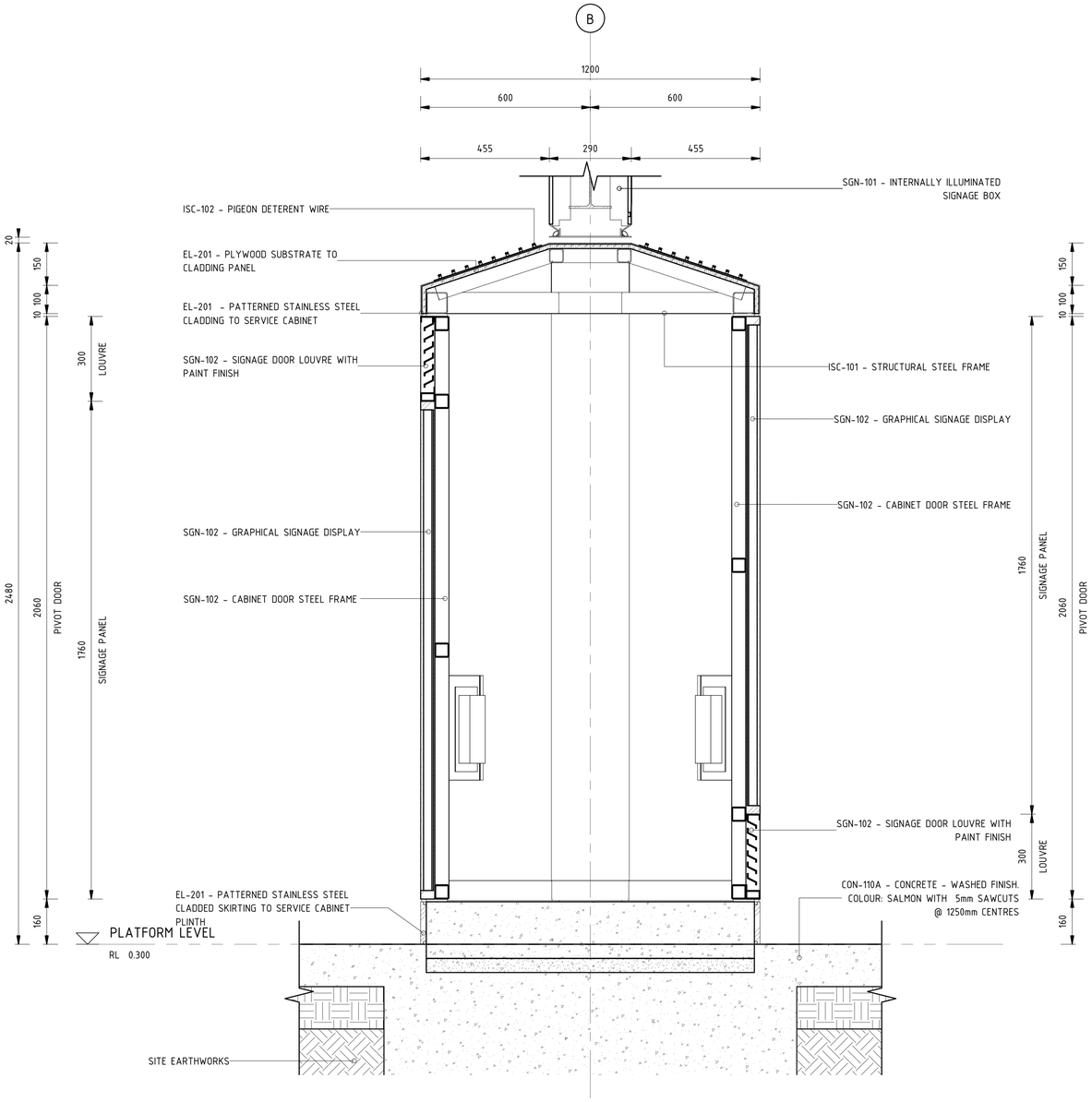

1 ISLAND I/S CABINET - SECTION A

Scale: 1 : 10

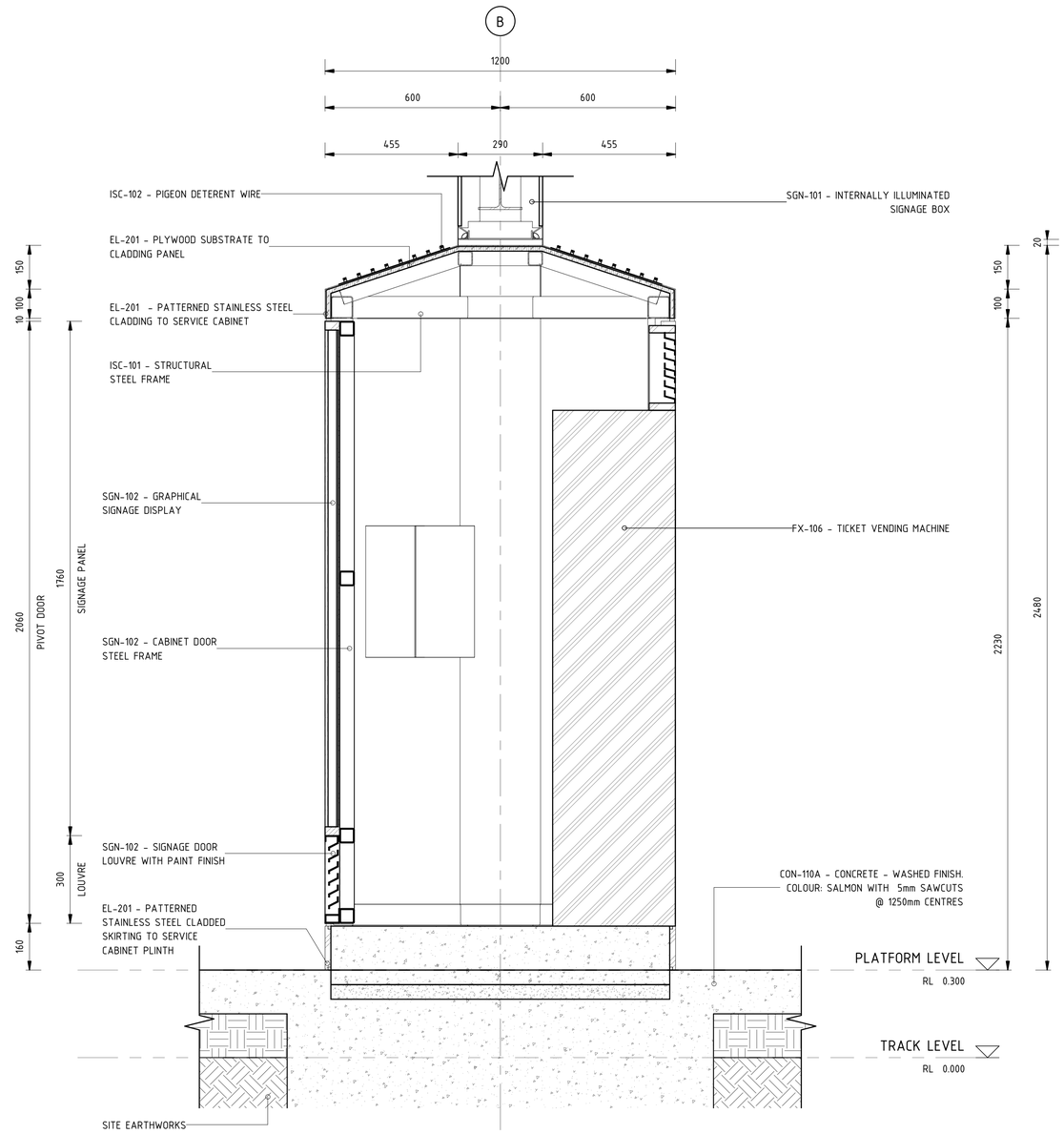

2 ISLAND I/S CABINET - SECTION B

Scale: 1 : 10

File Plotted C:\Users\PaulJenkins\Documents\160117_Typical Details_pauljenkins.rvt

Plot Date & Time 3/3/2017 11:19:42 PM

DRAWING COLOUR CODED - PRINT ALL COPIES IN COLOUR

SCALES AT A1 SIZE DRAWING

1:10 @ A1 0 100 200 300 400 500 mm

AMD	DESCRIPTION	DESIGNER SIGN / DATE	VERIFIED SIGN / DATE	APPROVED SIGN / DATE
B	STAGE 2R ISSUE	PJ 03/03	NJ 03/03	KC 03/03
A	STAGE 2 ISSUE	PJ 11/11	NJ 11/11	KC 11/11

CO-ORDINATE SYSTEM: *MGA Zone 56* HEIGHT DATUM: *A.H.D.* SCALE: *1 : 10 @ A1*

CapitalMetro ACT Government

CANBERRA METRO Move | Live | Grow

This drawing is confidential and shall only be used for the purpose of this project. The signing of this title block confirms the design and drafting of this project have been prepared and checked in accordance with the Architectus quality assurance system to ISO 9001-2008.

architectus™

DRAWN	PAUL JENKINS	03/03/2017
DESIGNED	PAUL JENKINS	03/03/2017
DRG CHECK	NIGEL JUSTINS	03/03/2017
DESIGN CHECK	TRENT RUSSELL	03/03/2017
APPROVED	KEVIN CURRUCAN	03/03/2017

CAPITAL METRO PROJECT

PACKAGE 55 - TYPICAL DETAILS

ARCHITECTURAL

INTEGRATED SERVICES CABINETS

TYPICAL ISLAND CABINET - SECTIONS 1

FILE No. 160117 SHEET: OF A1

STATUS: STAGE 2R ©

DRG No. 03-ARC-DRW-ARC-SP-8612 B EDMS No.

DF 801*554

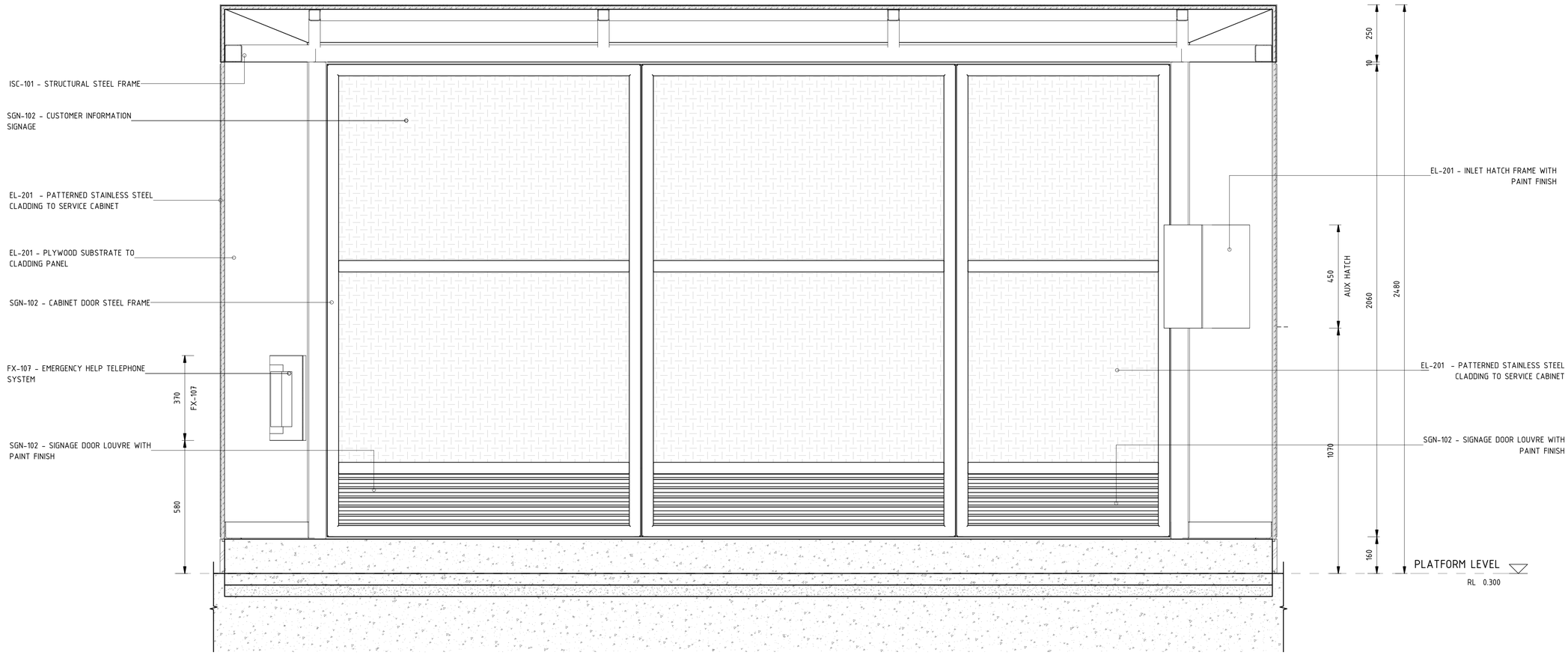

1 DETAIL - TYPICAL ISLAND CABINET - LONGITUNDINAL SECTION

Scale: 1 : 10

DRAWING COLOUR CODED - PRINT ALL COPIES IN COLOUR

SCALES AT A1 SIZE DRAWING

1:10 @ A1 0 100 200 300 400 500 mm

AMD	DESCRIPTION	DESIGNER SIGN / DATE	VERIFIED SIGN / DATE	APPROVED SIGN / DATE
A	STAGE 2R ISSUE	PJ 03/03	NJ 03/03	KC 03/03

CO-ORDINATE SYSTEM: *MGA Zone 56* | HEIGHT DATUM: *A.H.D.* | SCALE: *1 : 10 @ A1*

CapitalMetro ACT Government

CANBERRA METRO Move | Live | Grow

This drawing is confidential and shall only be used for the purpose of this project. The signing of this title block confirms the design and drafting of this project have been prepared and checked in accordance with the Architectus quality assurance system to ISO 9001-2008.

architectus™

DRAWN	PAUL JENKINS	03/03/2017
DESIGNED	PAUL JENKINS	03/03/2017
DRG CHECK	NIGEL JUSTINS	03/03/2017
DESIGN CHECK	TRENT RUSSELL	03/03/2017
APPROVED	KEVIN CURRUCAN	03/03/2017

CAPITAL METRO PROJECT

PACKAGE 55 - TYPICAL DETAILS

ARCHITECTURAL INTEGRATED SERVICES CABINETS

TYPICAL ISLAND CABINET - SECTIONS 2

FILE No. 160117 | SHEET: OF | A1

STATUS: STAGE 2R | ©

DRG No. 03-ARC-DRW-ARC-SP-8613 | A | EDMS No.

DF 801*554

File Plotted C:\Users\PaulJenkins\Documents\160117_Typical Details_pauljenkins.rvt

Plot Date & Time 3/3/2017 1:19:49 PM

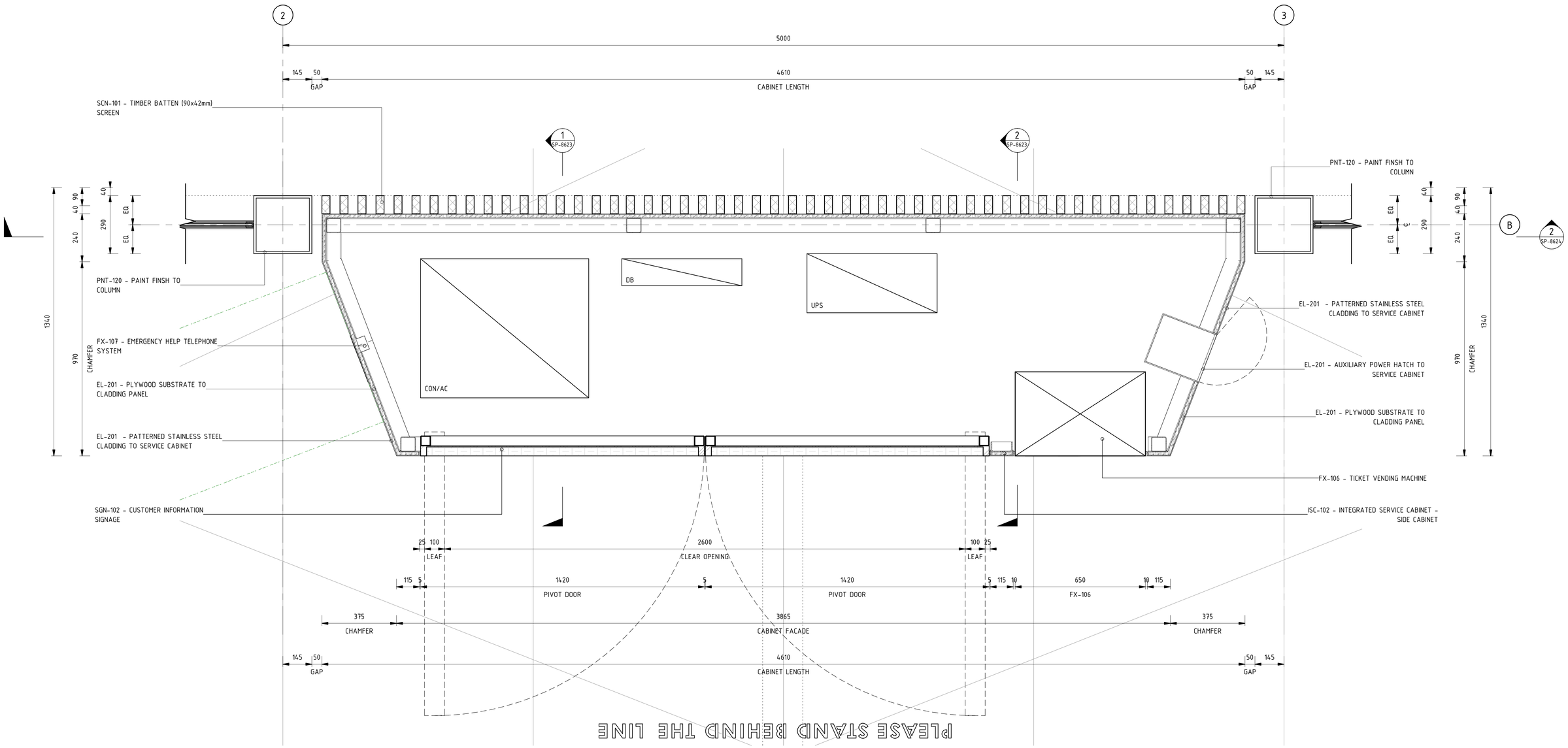

1 PLAN DETAIL - SIDE ISC CABINET

Scale: 1 : 10

DRAWING COLOUR CODED - PRINT ALL COPIES IN COLOUR

SCALES AT A1 SIZE DRAWING

1:10 @ A1 0 100 200 300 400 500 mm

AMD	DESCRIPTION	DESIGNER SIGN / DATE	VERIFIED SIGN / DATE	APPROVED SIGN / DATE
A	STAGE 2R ISSUE	PJ 03/03	NJ 03/03	KC 03/03

CO-ORDINATE SYSTEM: *MGA Zone 56* | HEIGHT DATUM: *A.H.D.* | SCALE: *1 : 10 @ A1*

CapitalMetro ACT Government

CANBERRA METRO Move | Live | Grow

This drawing is confidential and shall only be used for the purpose of this project. The signing of this title block confirms the design and drafting of this project have been prepared and checked in accordance with the Architectus quality assurance system to ISO 9001-2008.

architectus™

DRAWN	PAUL JENKINS	03/03/2017
DESIGNED	PAUL JENKINS	03/03/2017
DRG CHECK	NIGEL JUSTINS	03/03/2017
DESIGN CHECK	TRENT RUSSELL	03/03/2017
APPROVED	KEVIN CURRUCAN	03/03/2017

CAPITAL METRO PROJECT

PACKAGE 55 - TYPICAL DETAILS

ARCHITECTURAL

INTEGRATED SERVICES CABINETS

TYPICAL SIDE CABINET - PLAN LAYOUT A

FILE No. 160117 | SHEET: OF | A1

STATUS: STAGE 2R | ©

DRG No. 03-ARC-DRW-ARC-SP-8620 | A | EDMS No.

DF 801*554

File Plotted C:\Users\PaulJenkins\Documents\160117_Typical Details_pauljenkins.rvt

Plot Date & Time 3/3/2017 1:19:56 PM

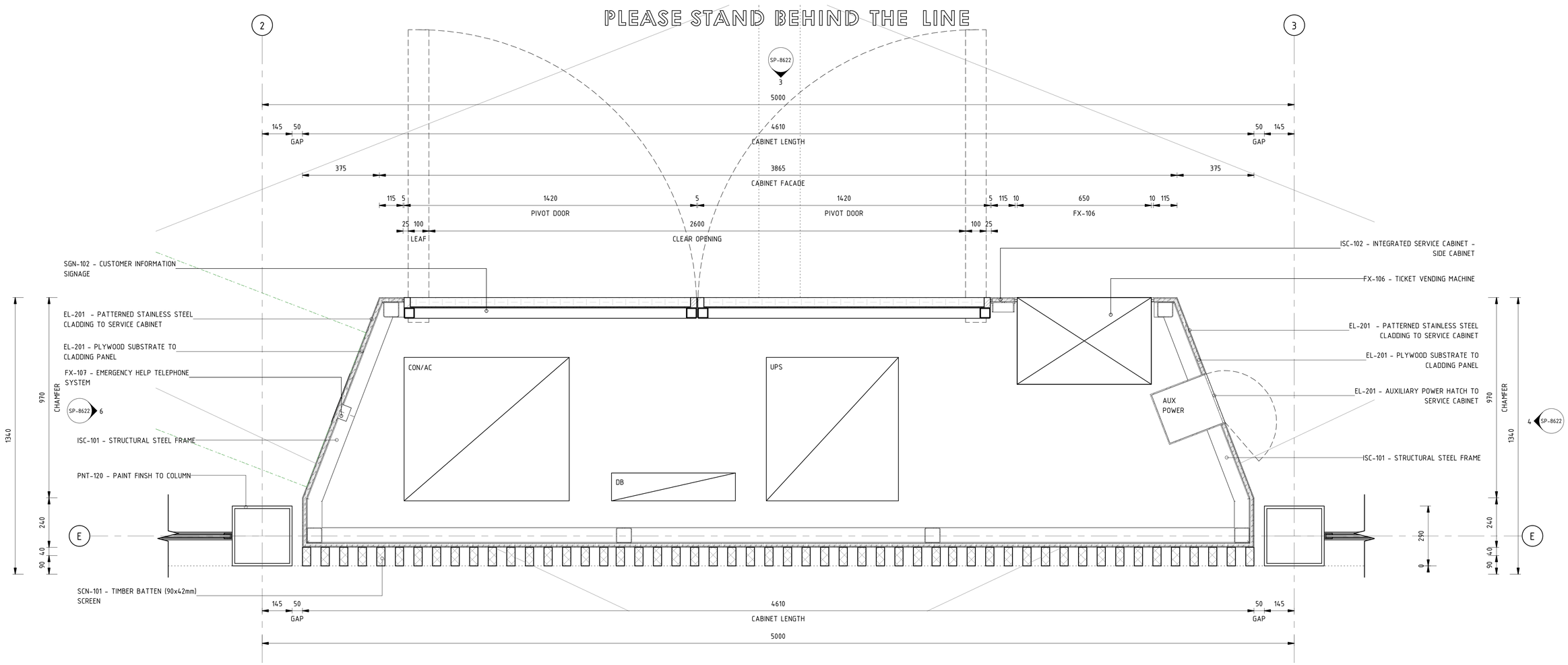

1 PLAN DETAIL - SIDE ISC CABINET

Scale: 1 : 10

DRAWING COLOUR CODED - PRINT ALL COPIES IN COLOUR

SCALES AT A1 SIZE DRAWING

1:10 @ A1 0 100 200 300 400 500 mm

AMD	DESCRIPTION	DESIGNER SIGN / DATE	VERIFIED SIGN / DATE	APPROVED SIGN / DATE
B	STAGE 2R ISSUE	PJ 03/03	NJ 03/03	KC 03/03
A	STAGE 2 ISSUE	PJ 11/11	NJ 11/11	KC 11/11

CO-ORDINATE SYSTEM: *MGA Zone 56* | HEIGHT DATUM: *A.H.D.* | SCALE: *1 : 10 @ A1*

CapitalMetro ACT Government

CANBERRA METRO Move | Live | Grow

This drawing is confidential and shall only be used for the purpose of this project. The signing of this title block confirms the design and drafting of this project have been prepared and checked in accordance with the Architectus quality assurance system to ISO 9001-2008.

architectus™

DRAWN	PAUL JENKINS	03/03/2017
DESIGNED	PAUL JENKINS	03/03/2017
DRG CHECK	NIGEL JUSTINS	03/03/2017
DESIGN CHECK	TRENT RUSSELL	03/03/2017
APPROVED	KEVIN CURRUCAN	03/03/2017

CAPITAL METRO PROJECT

PACKAGE 55 - TYPICAL DETAILS

ARCHITECTURAL INTEGRATED SERVICES CABINETS

TYPICAL SIDE CABINET - PLAN LAYOUT B

FILE No. 160117 | SHEET: OF | A1

STATUS: STAGE 2R | ©

DRG No. 03-ARC-DRW-ARC-SP-8621 | B | EDMS No.

DF 801*554

File Plotted C:\Users\PaulJenkins\Documents\160117_Typical Details_pauljenkins.rvt

Plot Date & Time 3/3/2017 1:20:02 PM

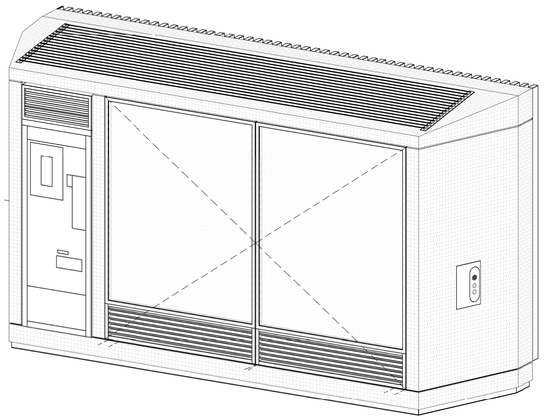

1 DETAIL - SIDE CABINET 3D

Scale:

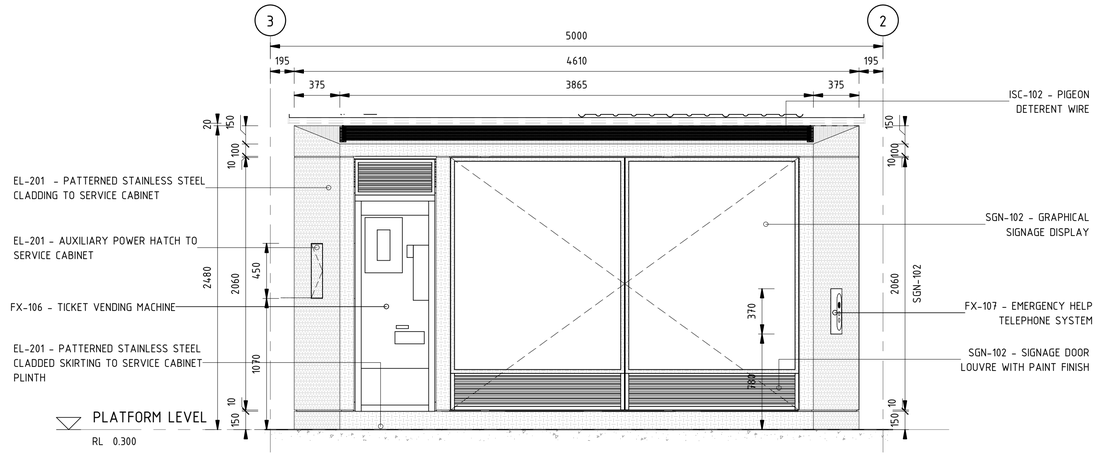

3 SIDE I/S CABINET - ELEVATION 01

Scale: 1 : 25

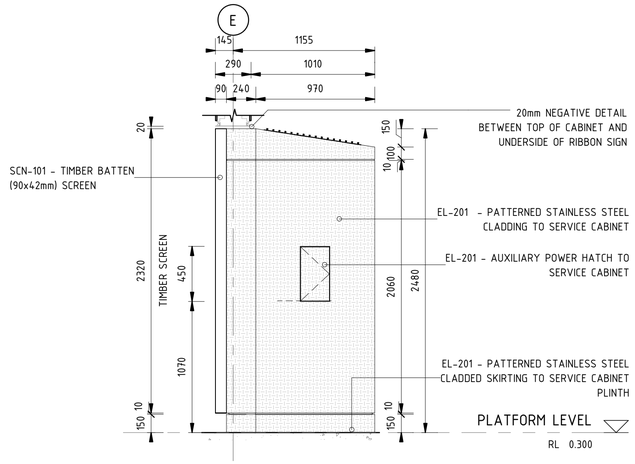

4 SIDE I/S CABINET - ELEVATION 02

Scale: 1 : 25

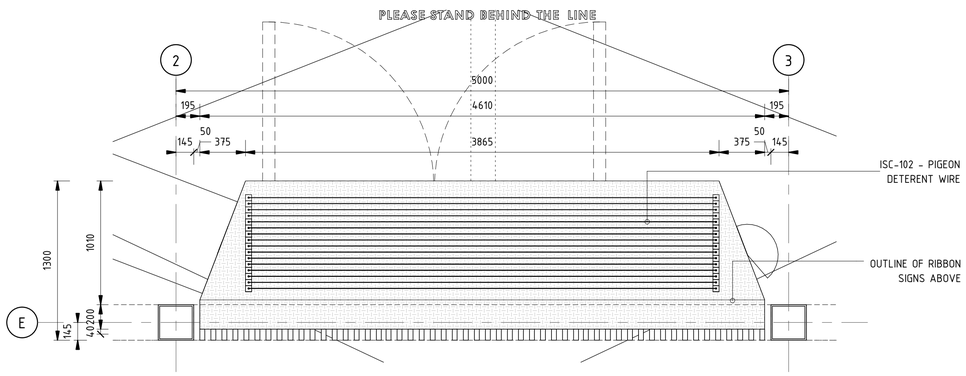

2 PLAN DETAIL - SIDE ISC CABINET (TOP)

Scale: 1 : 25

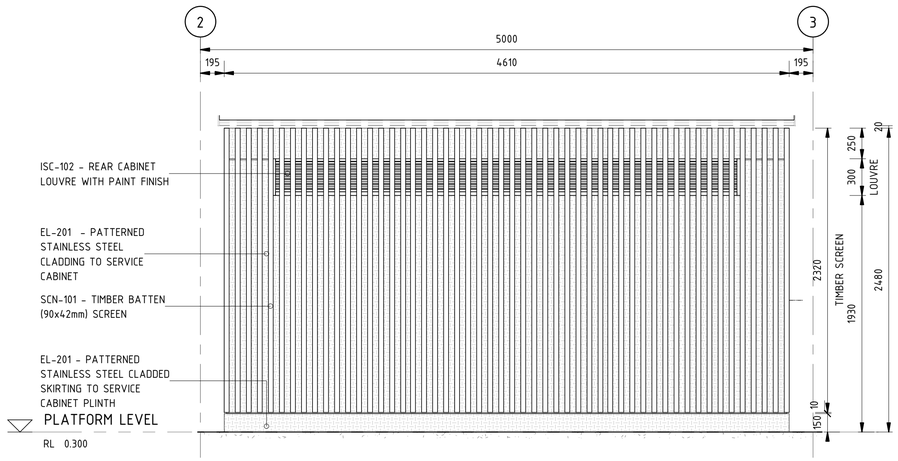

5 SIDE I/S CABINET - ELEVATION 03

Scale: 1 : 25

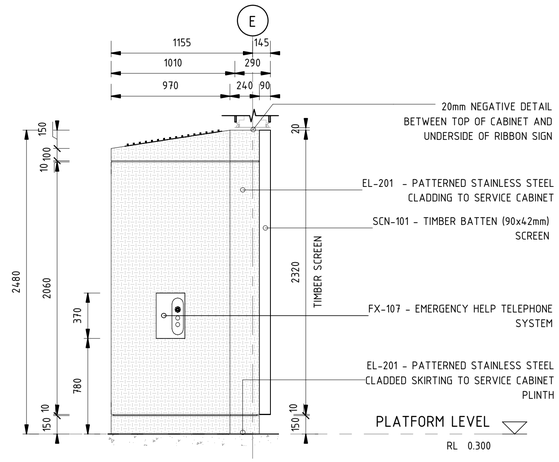

6 SIDE I/S CABINET - ELEVATION 04

Scale: 1 : 25

File Plotted C:\Users\PaulJenkins\Documents\160117_Typical Details_paulj.dwg.rvt

Plot Date & Time 3/3/2017 1:20:14 PM

DRAWING COLOUR CODED - PRINT ALL COPIES IN COLOUR

SCALES AT A1 SIZE DRAWING

1:25 @ A1 0 250 500 750 1000 1250 mm

AMD	DESCRIPTION	DESIGNER SIGN / DATE	VERIFIED SIGN / DATE	APPROVED SIGN / DATE
B	STAGE 2R ISSUE	PJ 03/03	NJ 03/03	KC 03/03
A	STAGE 2 ISSUE	PJ 11/11	NJ 11/11	KC 11/11

CO-ORDINATE SYSTEM: *MGA Zone 56* | HEIGHT DATUM: *A.H.D.* | SCALE: *1 : 25 @ A1*

CapitalMetro ACT Government

CANBERRA METRO Move | Live | Grow

This drawing is confidential and shall only be used for the purpose of this project. The signing of this title block confirms the design and drafting of this project have been prepared and checked in accordance with the Architectus quality assurance system to ISO 9001-2008.

architectus™

DRAWN	PAUL JENKINS	03/03/2017
DESIGNED	PAUL JENKINS	03/03/2017
DRG CHECK	NIGEL JUSTINS	03/03/2017
DESIGN CHECK	TRENT RUSSELL	03/03/2017
APPROVED	KEVIN CURRUCAN	03/03/2017

CAPITAL METRO PROJECT

PACKAGE 55 - TYPICAL DETAILS

ARCHITECTURAL

INTEGRATED SERVICES CABINETS

TYPICAL SIDE CABINET - ELEVATIONS

FILE No. 160117 | SHEET: OF | A1

STATUS: STAGE 2R | ©

DRG No. 03-ARC-DRW-ARC-SP-8622 | B | EDMS No.

DF 801*554

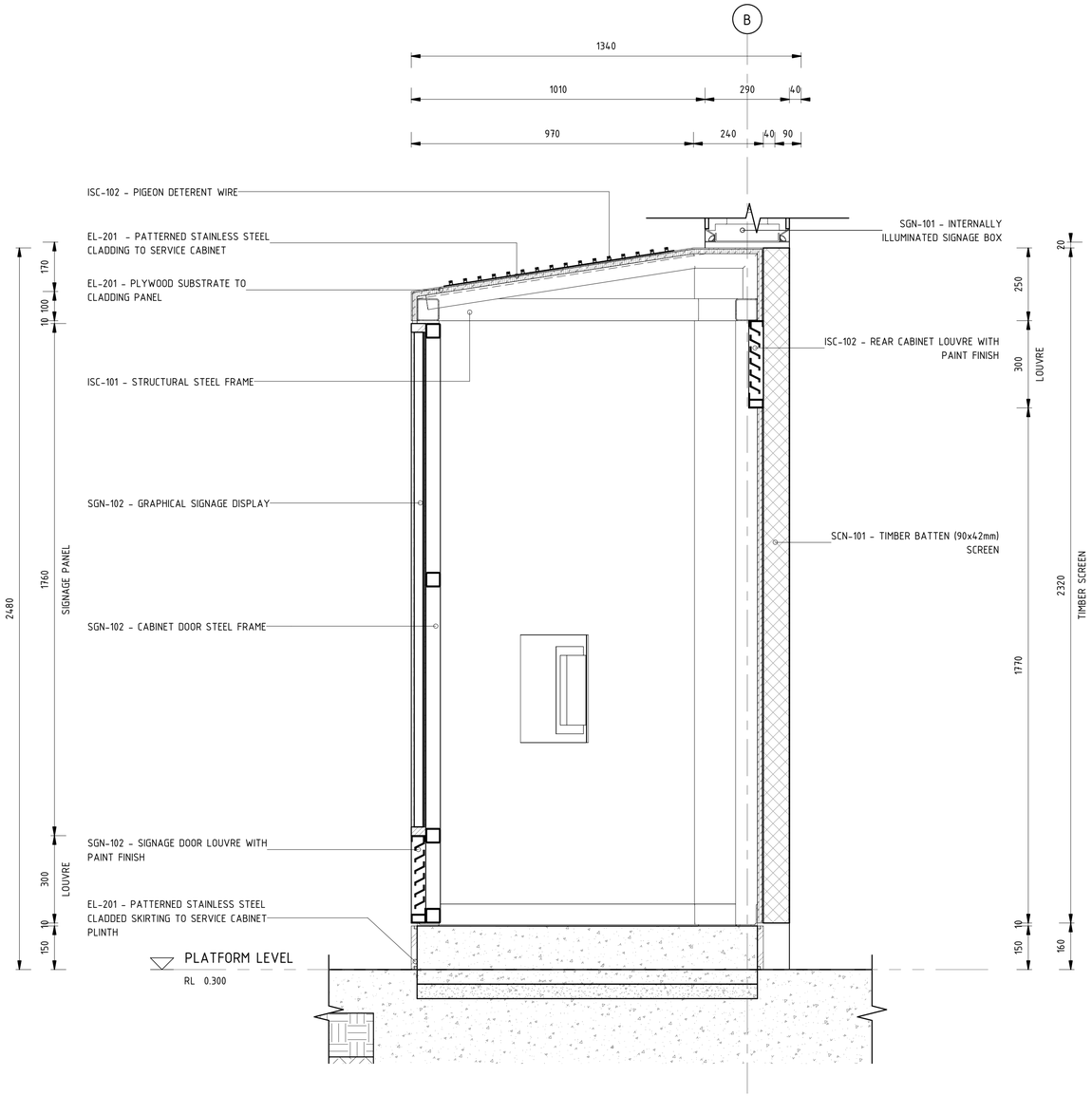

1 TYPICAL SIDE CABINET - SECTION 1 LAYOUT B

Scale: 1 : 10

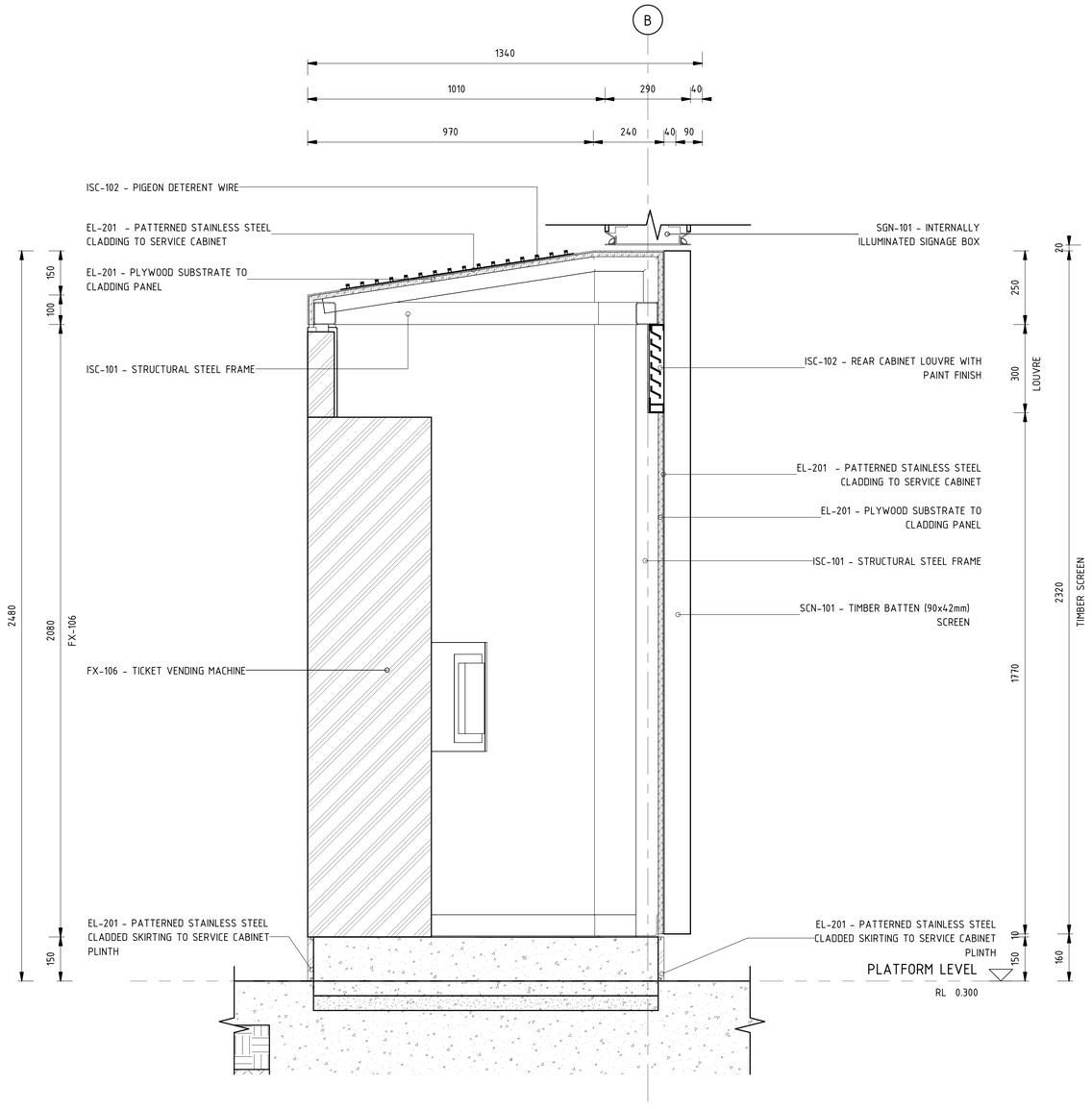

2 TYPICAL SIDE CABINET - SECTION 2 LAYOUT B

Scale: 1 : 10

File Plotted C:\Users\PaulJenkins\Documents\160117_Typical Details_pauljenkins.rvt

Plot Date & Time 3/3/2017 1:20:52 PM

DRAWING COLOUR CODED - PRINT ALL COPIES IN COLOUR

SCALES AT A1 SIZE DRAWING

1:25 @ A1 0 250 500 750 1000 1250 mm

AMD	DESCRIPTION	DESIGNER SIGN / DATE	VERIFIED SIGN / DATE	APPROVED SIGN / DATE
A	STAGE 2R ISSUE	PJ 03/03	NJ 03/03	KC 03/03

CO-ORDINATE SYSTEM: *MGA Zone 56* HEIGHT DATUM: *A.H.D.* SCALE: *1 : 10 @ A1*

CapitalMetro ACT Government

CANBERRA METRO Move | Live | Grow

This drawing is confidential and shall only be used for the purpose of this project. The signing of this title block confirms the design and drafting of this project have been prepared and checked in accordance with the Architectus quality assurance system to ISO 9001-2008.

architectus™

DRAWN	PAUL JENKINS	03/03/2017
DESIGNED	PAUL JENKINS	03/03/2017
DRG CHECK	NIGEL JUSTINS	03/03/2017
DESIGN CHECK	TRENT RUSSELL	03/03/2017
APPROVED	KEVIN CURRUCAN	03/03/2017

CAPITAL METRO PROJECT

PACKAGE 55 - TYPICAL DETAILS

ARCHITECTURAL

INTEGRATED SERVICES CABINETS

TYPICAL SIDE CABINET - SECTION 1

FILE No. 160117 SHEET: OF A1

STATUS: STAGE 2R ©

DRG No. 03-ARC-DRW-ARC-SP-8623 A EDMS No.

DF 801*554

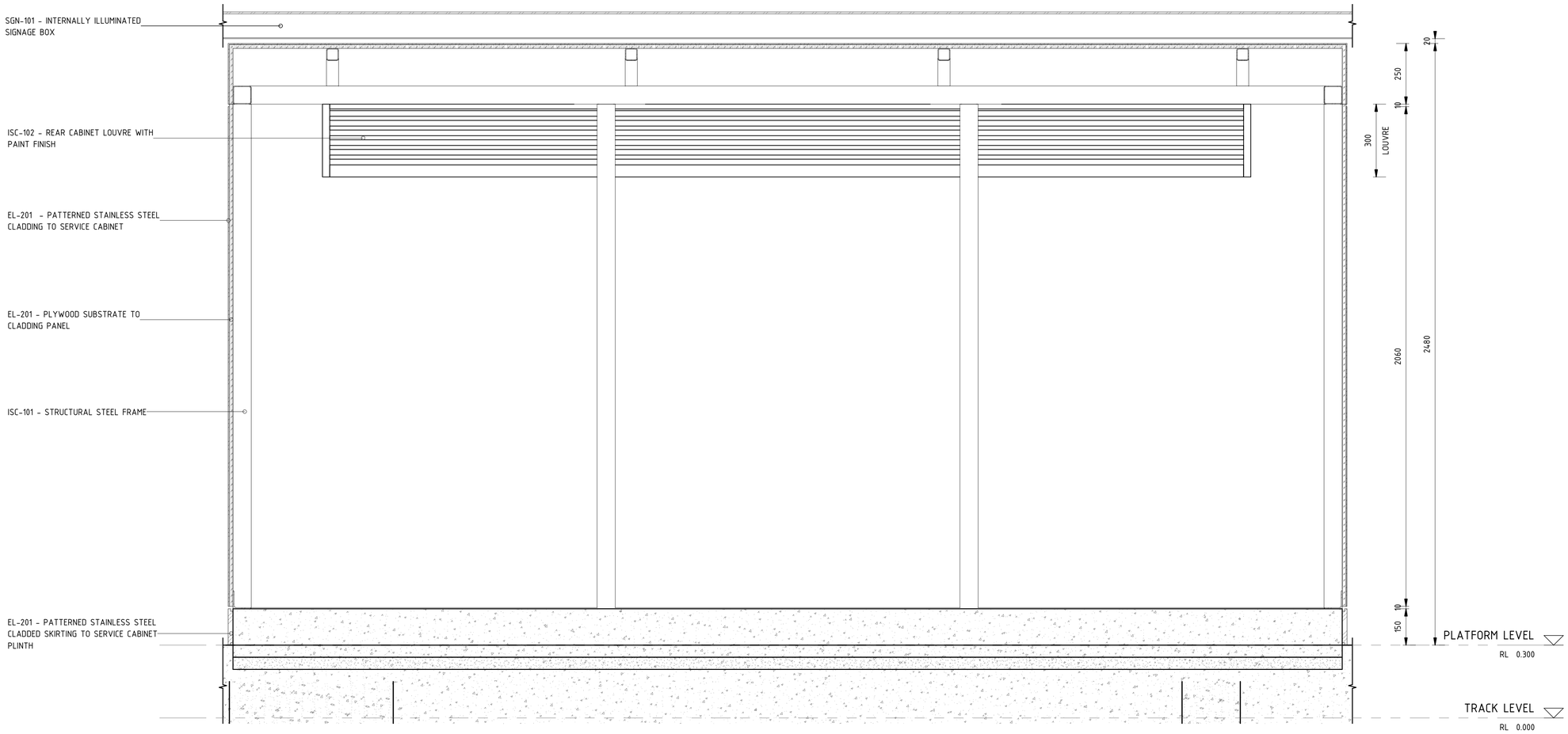

2 TYPICAL SIDE CABINET - SECTION 1 LAYOUT B1

Scale: 1 : 10

File Plotted C:\Users\PaulJenkins\Documents\160117_Typical Details_paulijenkins.rvt

Plot Date & Time 3/3/2017 1:20:58 PM

DRAWING COLOUR CODED - PRINT ALL COPIES IN COLOUR

SCALES AT A1 SIZE DRAWING

1:10 @ A1 0 100 200 300 400 500 mm

AMD	DESCRIPTION	DESIGNER SIGN / DATE	VERIFIED SIGN / DATE	APPROVED SIGN / DATE
A	STAGE 2R ISSUE	PJ 03/03	NJ 03/03	KC 03/03

CO-ORDINATE SYSTEM: *MGA Zone 56* | HEIGHT DATUM: *A.H.D.* | SCALE: *1 : 10 @ A1*

CapitalMetro ACT Government

CANBERRA METRO Move | Live | Grow

This drawing is confidential and shall only be used for the purpose of this project. The signing of this title block confirms the design and drafting of this project have been prepared and checked in accordance with the Architectus quality assurance system to ISO 9001-2008.

architectus™

DRAWN	PAUL JENKINS	03/03/2017
DESIGNED	PAUL JENKINS	03/03/2017
DRG CHECK	NIGEL JUSTINS	03/03/2017
DESIGN CHECK	TRENT RUSSELL	03/03/2017
APPROVED	KEVIN CURRUCAN	03/03/2017

CAPITAL METRO PROJECT

PACKAGE 55 - TYPICAL DETAILS

ARCHITECTURAL

INTEGRATED SERVICES CABINETS

TYPICAL SIDE CABINET - SECTION 2

FILE No. 160117 | SHEET: OF | A1

STATUS: STAGE 2R | ©

DRG No. 03-ARC-DRW-ARC-SP-8624 | A | EDMS No.

DF 801*554

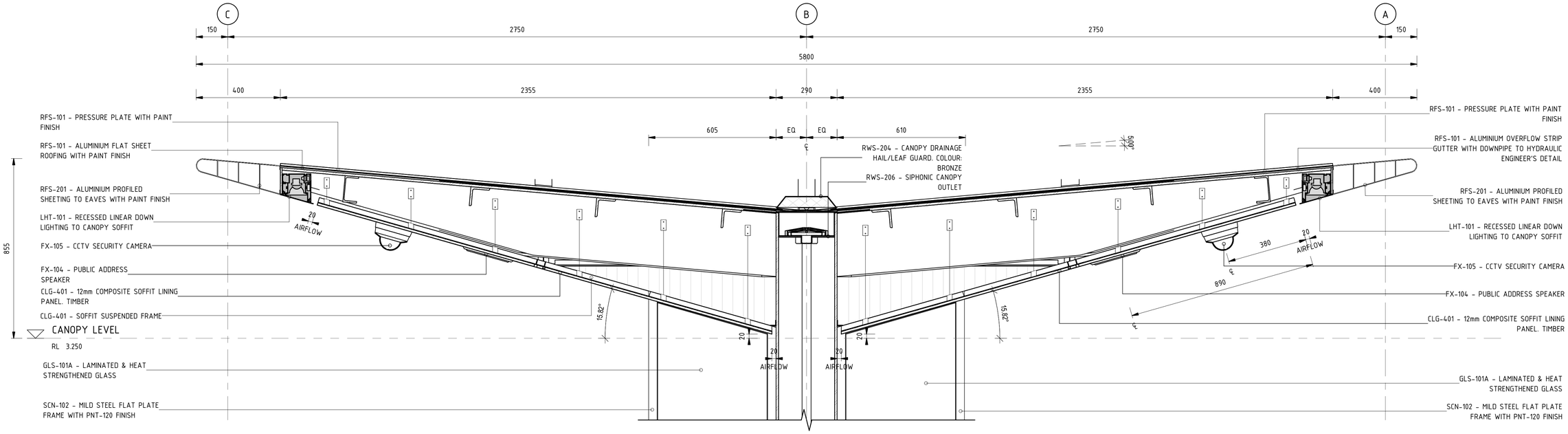

1 ISLAND CANOPY DETAIL

Scale: 1 : 10

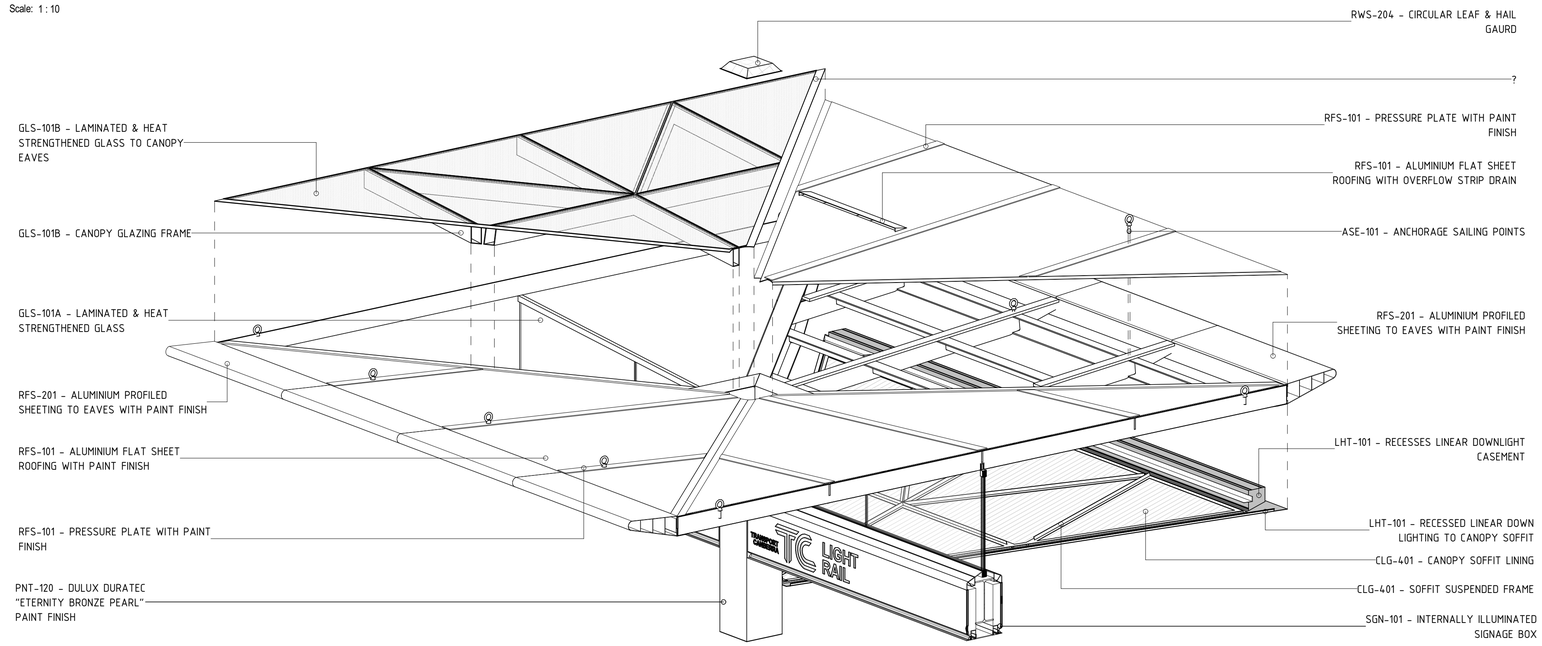

2 ISLAND CANOPY 3D

Scale:

DRAWING COLOUR CODED - PRINT ALL COPIES IN COLOUR

SCALES AT A1 SIZE DRAWING

1:10 @ A1 0 100 200 300 400 500 mm

AMD	DESCRIPTION	DESIGNER SIGN / DATE	VERIFIED SIGN / DATE	APPROVED SIGN / DATE
B	STAGE 2R ISSUE	PJ 03/03	NJ 03/03	KC 03/03
A	STAGE 2 ISSUE	PJ 11/11	NJ 11/11	KC 11/11

CO-ORDINATE SYSTEM: *MGA Zone 56* | HEIGHT DATUM: *A.H.D.* | SCALE: *1 : 10 @ A1*

CapitalMetro ACT Government

CANBERRA METRO Move | Live | Grow

This drawing is confidential and shall only be used for the purpose of this project. The signing of this title block confirms the design and drafting of this project have been prepared and checked in accordance with the Architectus quality assurance system to ISO 9001-2008.

architectus™

DRAWN	PAUL JENKINS	03/03/2017
DESIGNED	PAUL JENKINS	03/03/2017
DRG CHECK	NIGEL JUSTINS	03/03/2017
DESIGN CHECK	TRENT RUSSELL	03/03/2017
APPROVED	KEVIN CURRUCAN	03/03/2017

CAPITAL METRO PROJECT

PACKAGE 55 - TYPICAL DETAILS

ARCHITECTURAL

CANOPY DETAILS

TYPICAL ISLAND CANOPY - DETAILS

FILE No. 160117 | SHEET: OF | A1

STATUS: STAGE 2R | ©

DRG No. 03-ARC-DRW-ARC-SP-8630 | B | EDMS No.

DF 801*554

File Plotted C:\Users\PaulJenkins\Documents\160117_Typical Details_pauljenkins.rvt

Plot Date & Time 3/3/2017 1:21:09 PM

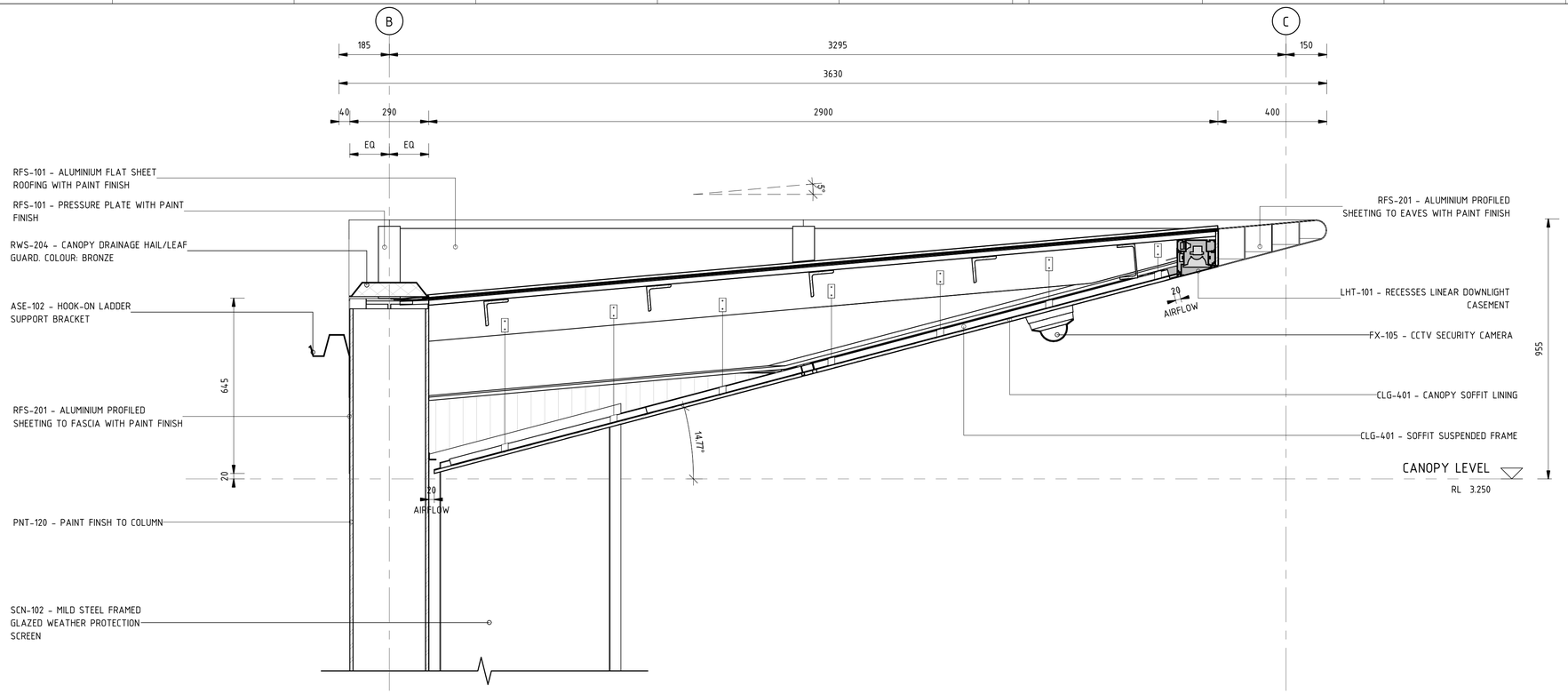

1 SIDE CANOPY DETAIL

Scale: 1 : 10

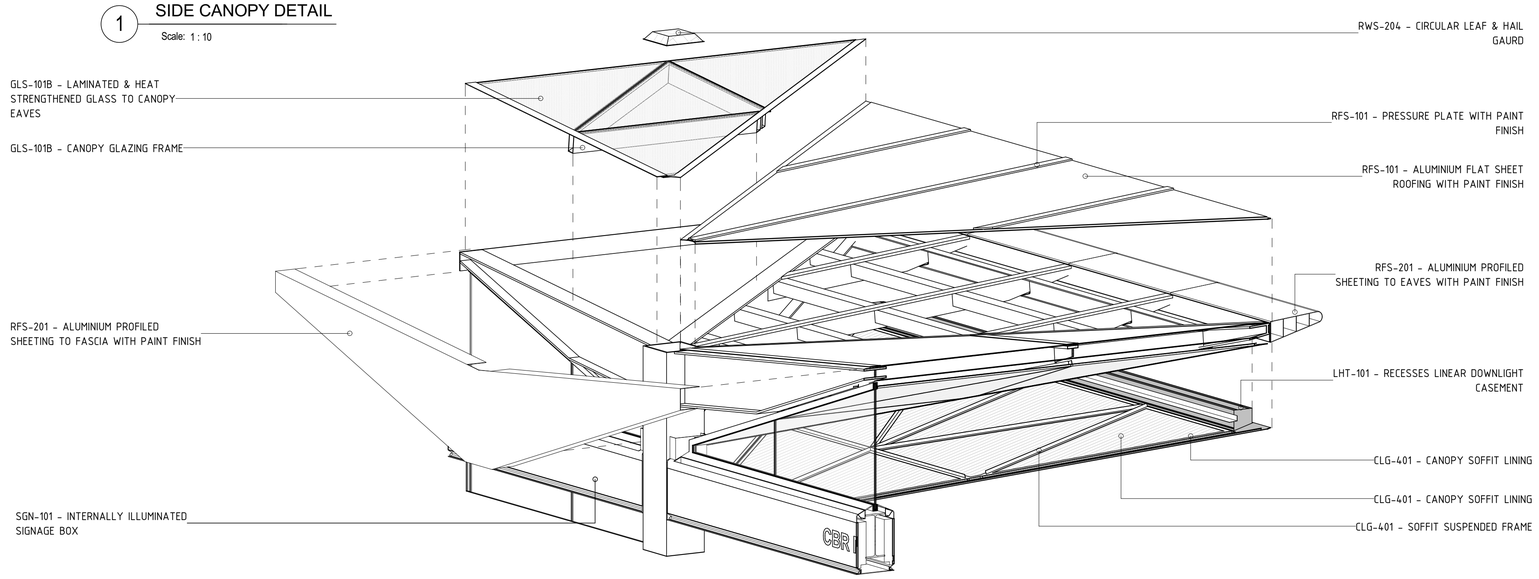

2 SIDE CANOPY 3D

Scale:

SCALES AT A1 SIZE DRAWING

1:10 @ A1 0 100 200 300 400 500 mm

DRAWING COLOUR CODED - PRINT ALL COPIES IN COLOUR

AMD	DESCRIPTION	DESIGNER SIGN / DATE	VERIFIED SIGN / DATE	APPROVED SIGN / DATE
B	STAGE 2R ISSUE	PJ 03/03	NJ 03/03	KC 03/03
A	STAGE 2 ISSUE	PJ 11/11	NJ 11/11	KC 11/11

CO-ORDINATE SYSTEM: *MGA Zone 56* | HEIGHT DATUM: *A.H.D.* | SCALE: *1 : 10 @ A1*

CapitalMetro ACT Government

CANBERRA METRO Move | Live | Grow

This drawing is confidential and shall only be used for the purpose of this project. The signing of this title block confirms the design and drafting of this project have been prepared and checked in accordance with the Architectus quality assurance system to ISO 9001-2008.

architectus™

DRAWN	PAUL JENKINS	03/03/2017
DESIGNED	PAUL JENKINS	03/03/2017
DRG CHECK	NIGEL JUSTINS	03/03/2017
DESIGN CHECK	TRENT RUSSELL	03/03/2017
APPROVED	KEVIN CURRUCAN	03/03/2017

CAPITAL METRO PROJECT

PACKAGE 55 - TYPICAL DETAILS

ARCHITECTURAL

CANOPY DETAILS

TYPICAL SIDE CANOPY - DETAILS

FILE No. 160117 | SHEET: OF | A1

STATUS: STAGE 2R | ©

DRG No. 03-ARC-DRW-ARC-SP-8631 | B | EDMS No.

DF 801*554

File Plotted C:\Users\PaulJenkins\Documents\160117_Typical Details_pauljenkins.rvt

Plot Date & Time 3/3/2017 1:21:21 PM

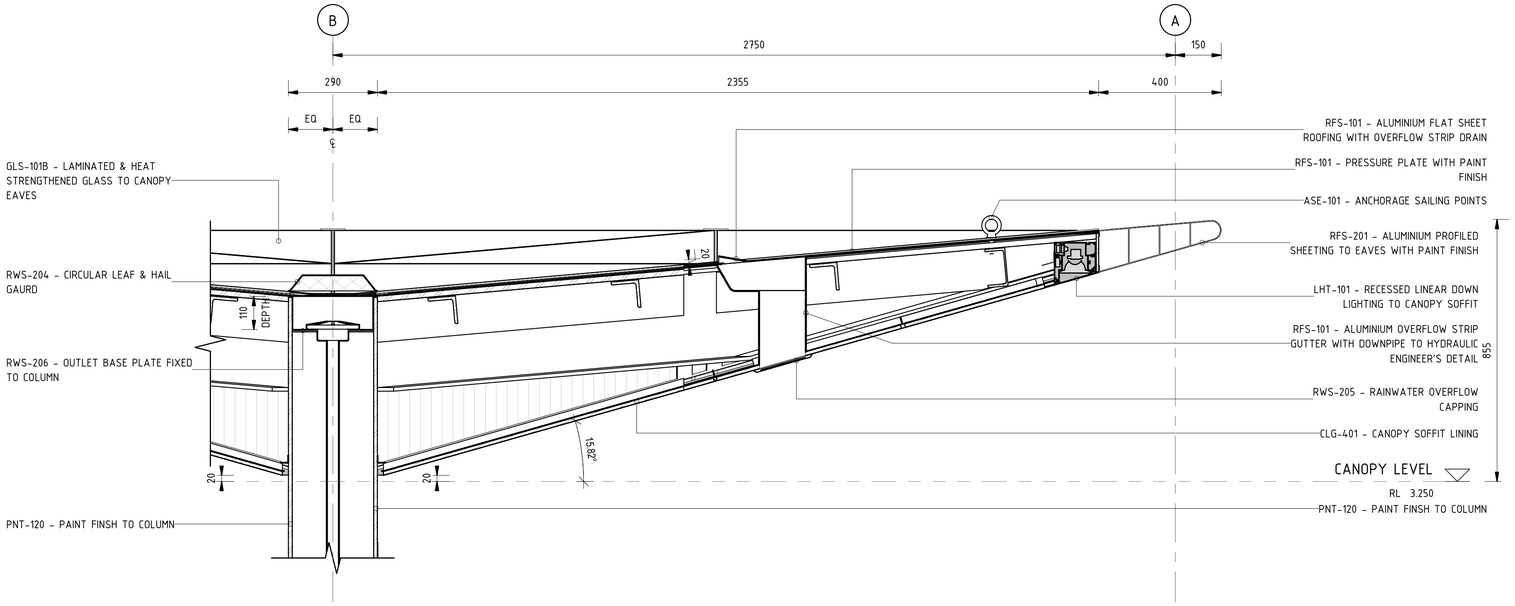

1 DETAIL - ISLAND CANOPY OVERFLOW

Scale: 1 : 10

DRAWING COLOUR CODED - PRINT ALL COPIES IN COLOUR

AMD	DESCRIPTION	DESIGNER SIGN / DATE	VERIFIED SIGN / DATE	APPROVED SIGN / DATE
A	STAGE 2R ISSUE	PJ 03/03	NJ 03/03	KC 03/03

CO-ORDINATE SYSTEM: *MGA Zone 56* | HEIGHT DATUM: *A.H.D.* | SCALE: *1 : 10 @ A1*

CapitalMetro ACT Government

CANBERRA METRO Move | Live | Grow

This drawing is confidential and shall only be used for the purpose of this project. The signing of this title block confirms the design and drafting of this project have been prepared and checked in accordance with the Architectus quality assurance system to ISO 9001-2008.

architectus™

DRAWN	PAUL JENKINS	03/03/2017
DESIGNED	PAUL JENKINS	03/03/2017
DRG CHECK	NIGEL JUSTINS	03/03/2017
DESIGN CHECK	TRENT RUSSELL	03/03/2017
APPROVED	KEVIN CURRUCAN	03/03/2017

CAPITAL METRO PROJECT

PACKAGE 55 - TYPICAL DETAILS

ARCHITECTURAL CANOPY DETAILS

TYPICAL ISLAND CANOPY - OVERFLOW DETAIL

FILE No. 160117 | SHEET: OF | A1

STATUS: STAGE 2R | ©

DRG No. 03-ARC-DRW-ARC-SP-8632 | A | EDMS No.

DF 801*554

File Plotted C:\Users\PaulJenkins\Documents\160117_Typical Details_pauljenkins.rvt

Plot Date & Time 3/3/2017 1:21:30 PM

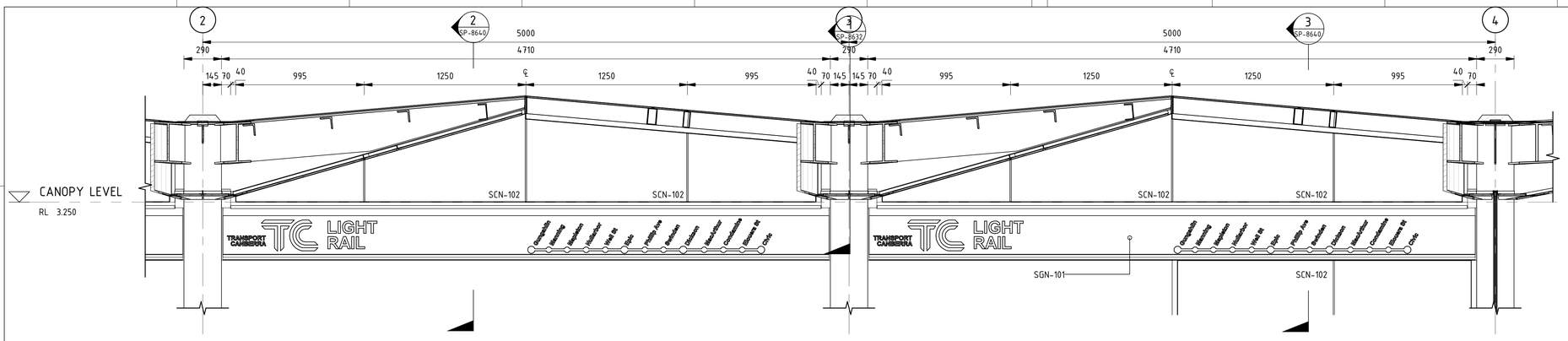

1 ISLAND RIBBON SIGNAGE ELAVATION

Scale: 1 : 20

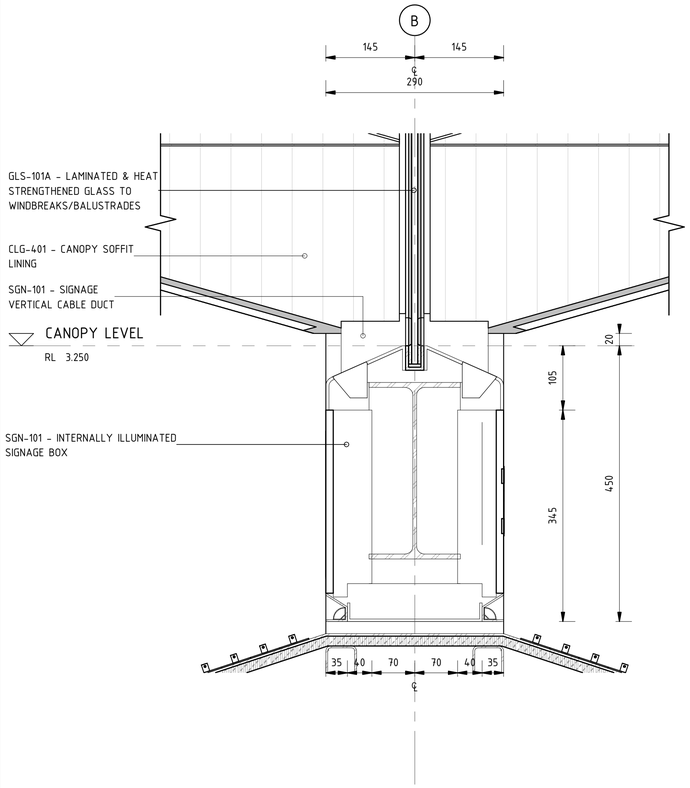

2 ISLAND RIBBON SIGNAGE DETAIL AT CABINET

Scale: 1 : 5

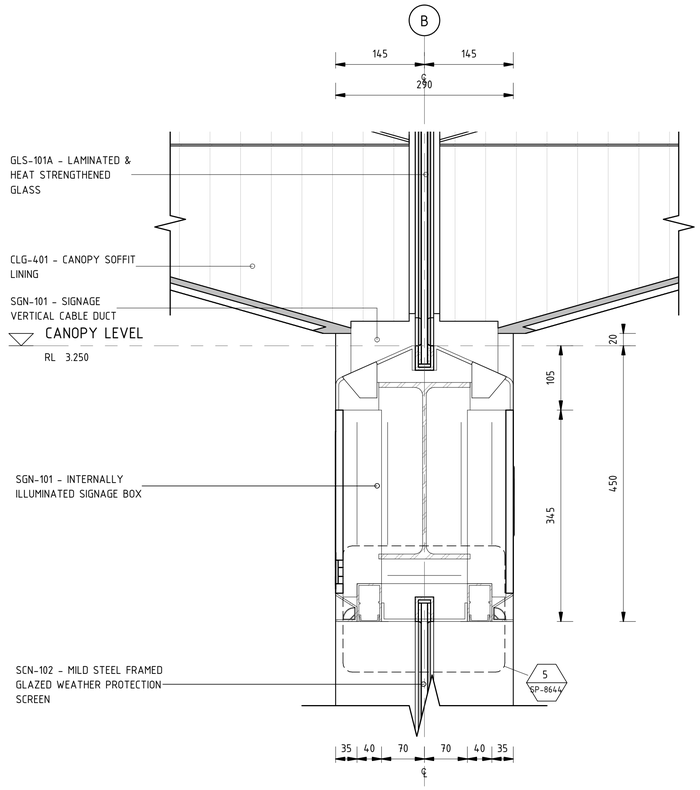

3 ISLAND RIBBON SIGNAGE DETAIL AT GLAZING

Scale: 1 : 5

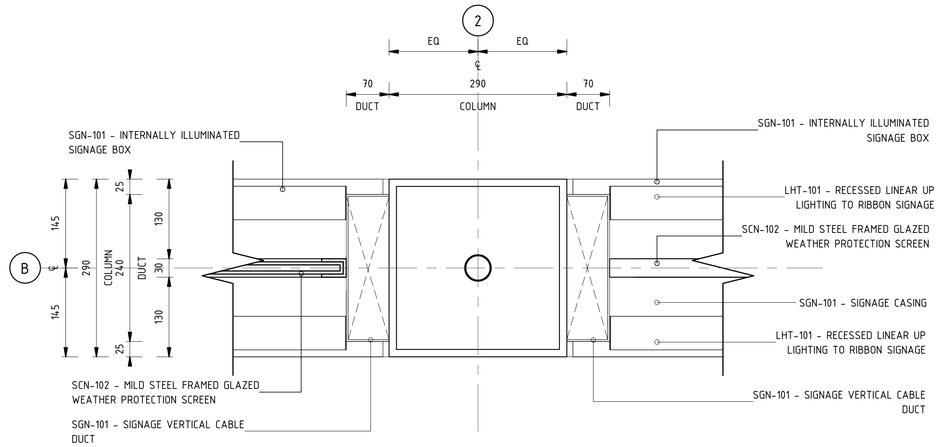

4 ISLAND PLATFORM - RIBBON CABLE PLAN

Scale: 1 : 5

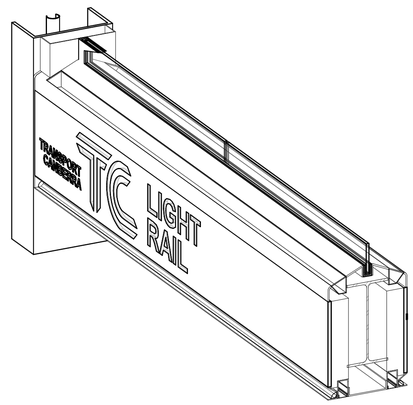

5 ISLAND RIBBON SIGNAGE AT GLAZING 3D

Scale:

DRAWING COLOUR CODED - PRINT ALL COPIES IN COLOUR

SCALES AT A1 SIZE DRAWING

1:10 @ A1 0 100 200 300 400 500 mm

AMD	DESCRIPTION	DESIGNER SIGN / DATE	VERIFIED SIGN / DATE	APPROVED SIGN / DATE
B	STAGE 2R ISSUE	PJ 03/03	NJ 03/03	KC 03/03
A	STAGE 2 ISSUE	PJ 11/11	NJ 11/11	KC 11/11

CO-ORDINATE SYSTEM: *MGA Zone 56* | HEIGHT DATUM: *A.H.D.* | SCALE: *As indicated @ A1*

CapitalMetro ACT Government

CANBERRA METRO Move | Live | Grow

This drawing is confidential and shall only be used for the purpose of this project. The signing of this title block confirms the design and drafting of this project have been prepared and checked in accordance with the Architectus quality assurance system to ISO 9001-2008.

architectus™

DRAWN	PAUL JENKINS	03/03/2017
DESIGNED	PAUL JENKINS	03/03/2017
DRG CHECK	NIGEL JUSTINS	03/03/2017
DESIGN CHECK	TRENT RUSSELL	03/03/2017
APPROVED	KEVIN CURRUCAN	03/03/2017

CAPITAL METRO PROJECT

PACKAGE 55 - TYPICAL DETAILS

ARCHITECTURAL

RIBBON SIGNAGE

TYPICAL ISLAND PLATFORM - RIBBON SIGN

FILE No. 160117 | SHEET: OF | A1

STATUS: STAGE 2R ©

DRG No. 03-ARC-DRW-ARC-SP-8640 | B | EDMS No.

DF 801*554

File Plotted C:\Users\PaulJenkins\Documents\160117_Typical Details_pauljenkins.rvt

Plot Date & Time 3/3/2017 1:21:37 PM

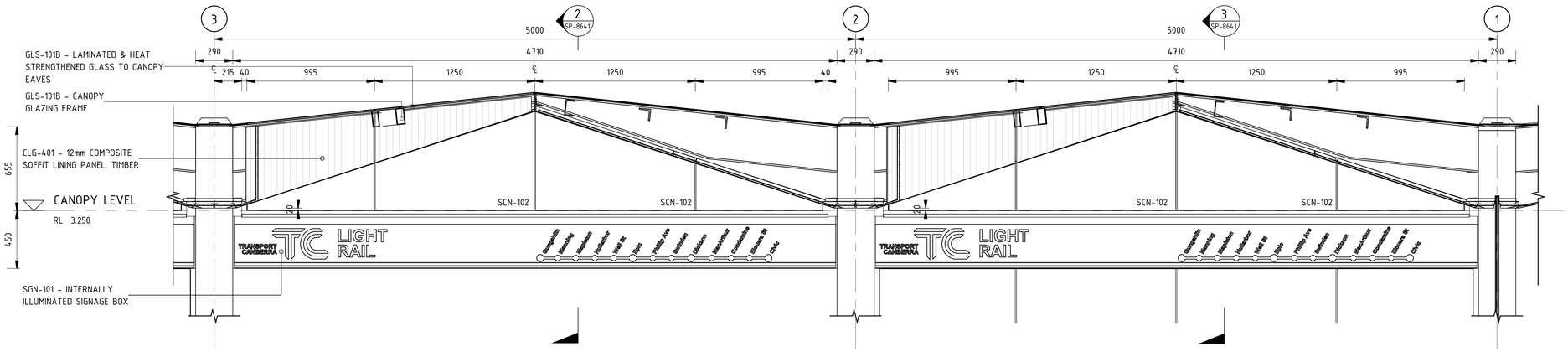

1 SIDE RIBBON SIGNAGE ELEVATION

Scale: 1 : 20

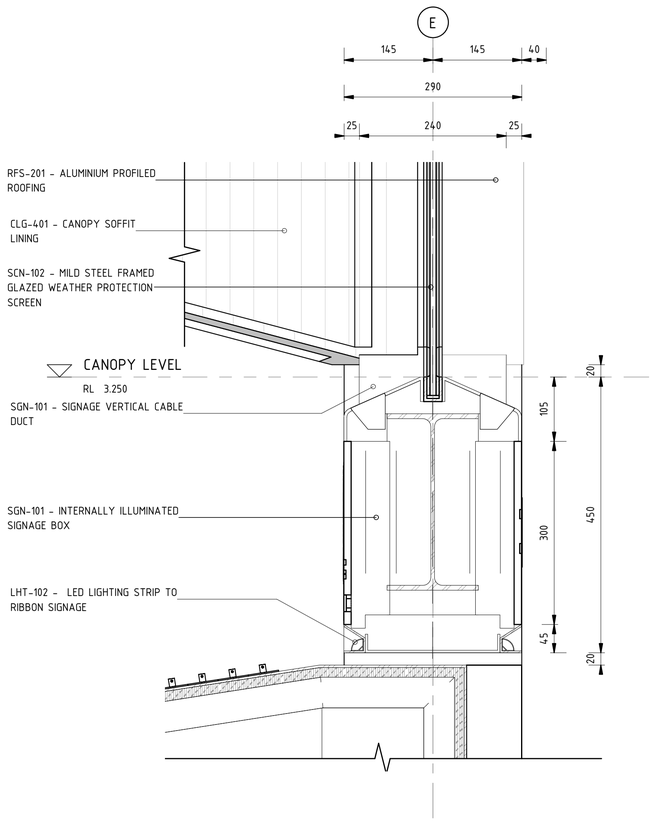

2 SIDE RIBBON SIGNAGE DETAIL AT CABINET

Scale: 1 : 5

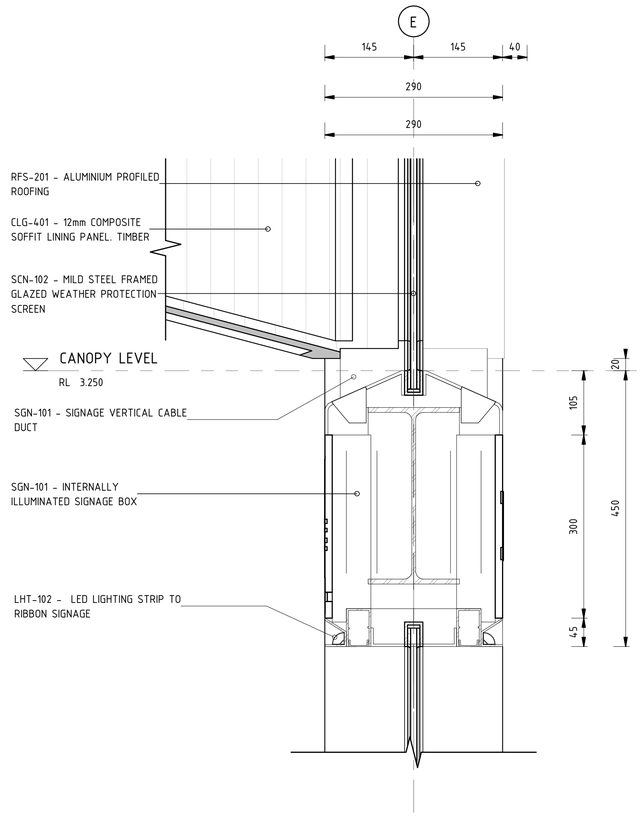

3 SIDE RIBBON SIGNAGE DETAIL AT GLAZING

Scale: 1 : 5

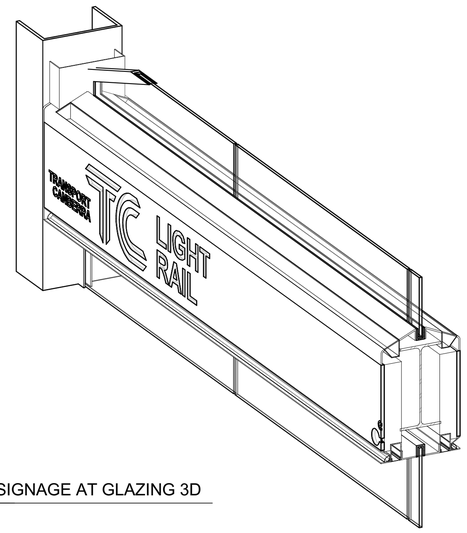

4 SIDE RIBBON SIGNAGE AT GLAZING 3D

Scale:

DRAWING COLOUR CODED - PRINT ALL COPIES IN COLOUR

SCALES AT A1 SIZE DRAWING

1:10 @ A1 0 100 200 300 400 500 mm

AMD	DESCRIPTION	DESIGNER SIGN / DATE	VERIFIED SIGN / DATE	APPROVED SIGN / DATE
B	STAGE 2R ISSUE	PJ 03/03	NJ 03/03	KC 03/03
A	STAGE 2 ISSUE	PJ 11/11	NJ 11/11	KC 11/11

CO-ORDINATE SYSTEM: *MGA Zone 56* HEIGHT DATUM: *A.H.D.* SCALE: *As indicated @ A1*

CapitalMetro ACT Government

CANBERRA METRO Move | Live | Grow

This drawing is confidential and shall only be used for the purpose of this project. The signing of this title block confirms the design and drafting of this project have been prepared and checked in accordance with the Architectus quality assurance system to ISO 9001-2008.

architectus™

DRAWN	PAUL JENKINS	03/03/2017
DESIGNED	PAUL JENKINS	03/03/2017
DRG CHECK	NIGEL JUSTINS	03/03/2017
DESIGN CHECK	TRENT RUSSELL	03/03/2017
APPROVED	KEVIN CURRUCAN	03/03/2017

CAPITAL METRO PROJECT

PACKAGE 55 - TYPICAL DETAILS

ARCHITECTURAL

RIBBON SIGNAGE

TYPICAL SIDE PLATFORM - RIBBON SIGN

FILE No. 160117 SHEET: OF A1

STATUS: STAGE 2R ©

DRG No. 03-ARC-DRW-ARC-SP-8641 B EDMS No.

DF 801*554

File Plotted C:\Users\PaulJenkins\Documents\160117_Typical Details_pauljenkins.rvt

Plot Date & Time 3/3/2017 1:21:45 PM

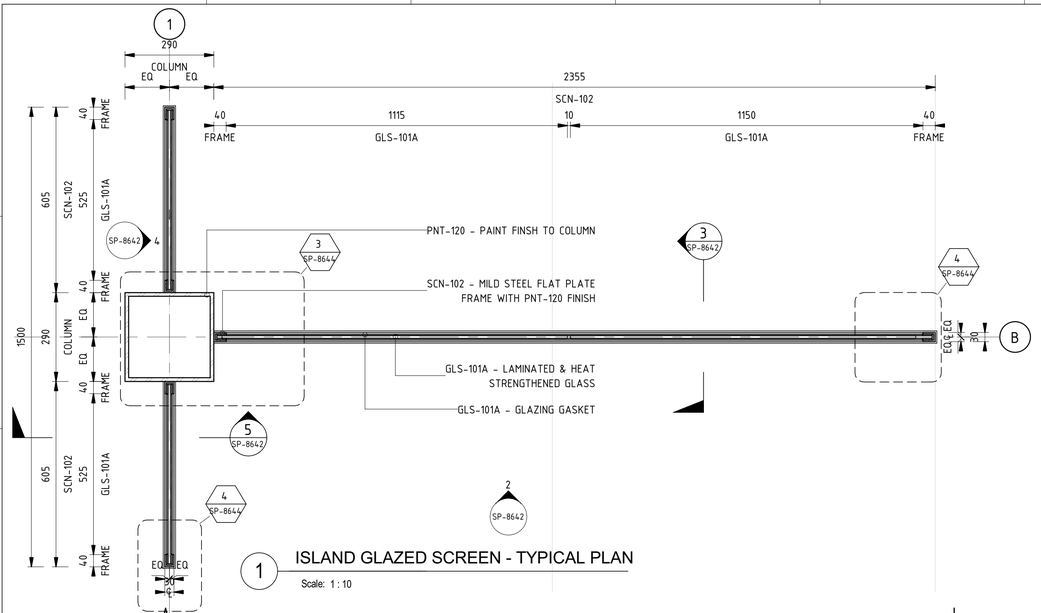

1 ISLAND GLAZED SCREEN - TYPICAL PLAN

Scale: 1 : 10

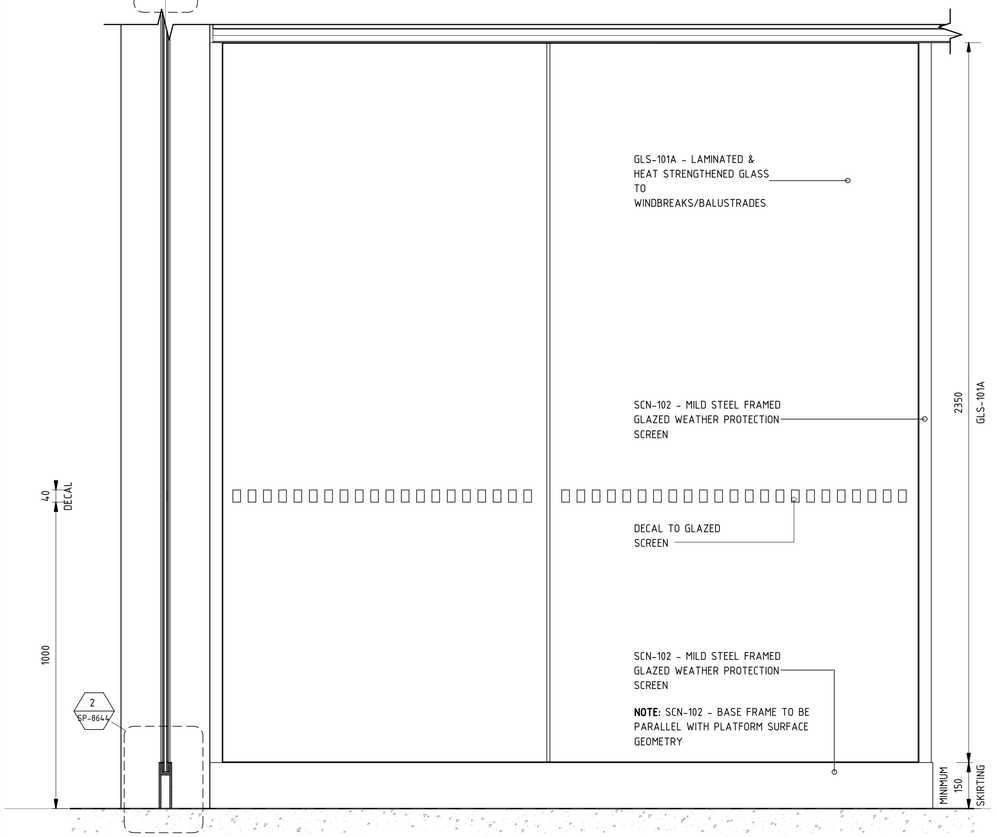

2 ISLAND GLAZED SCREEN - FRONT ELEVATION

Scale: 1 : 10

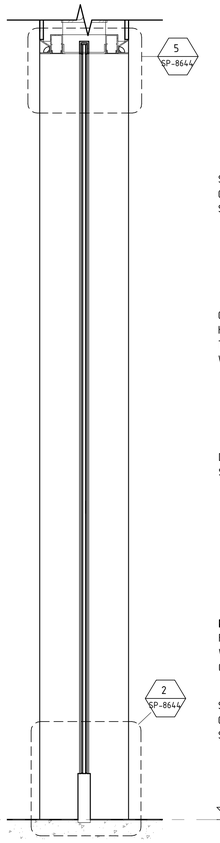

3 ISLAND SCREEN AT SIGNAGE

Scale: 1 : 10

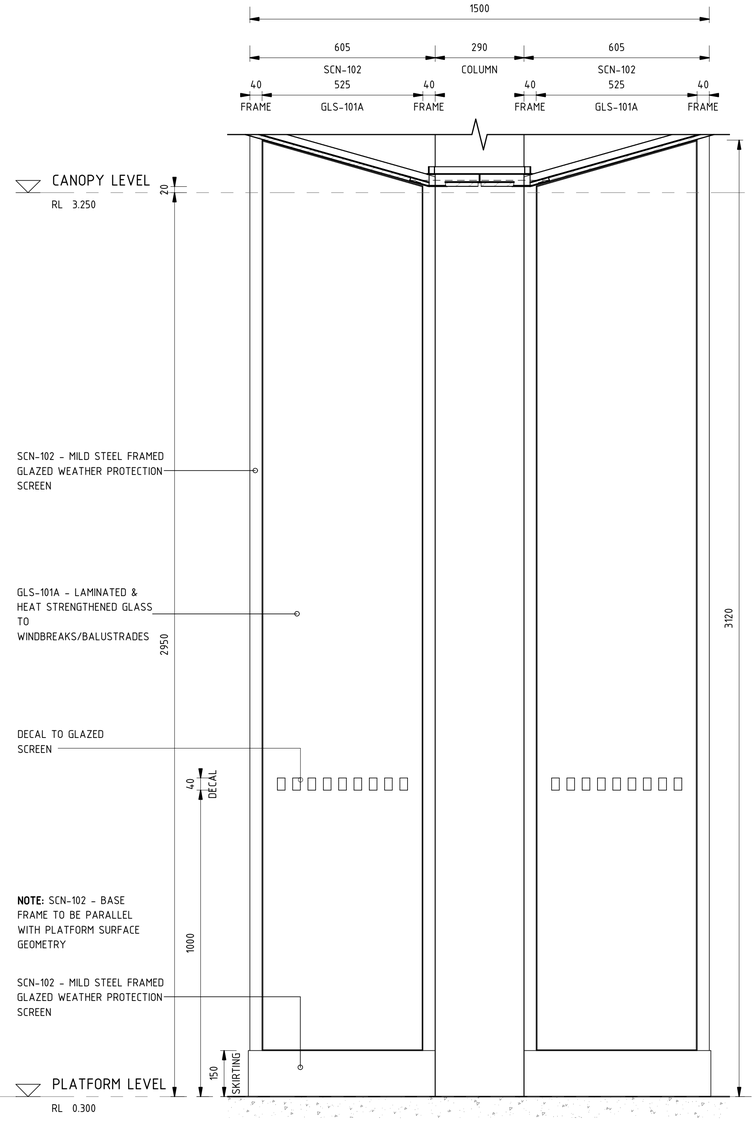

4 ISLAND GLAZED SCREEN - SIDE ELEVATION

Scale: 1 : 10

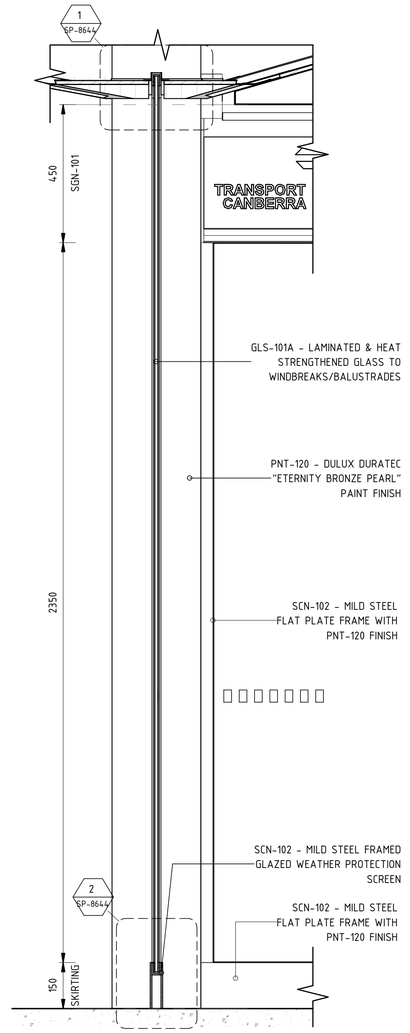

5 ISLAND GLAZED SCREEN AT CANOPY

Scale: 1 : 10

SCALES AT A1 SIZE DRAWING

1:10 @ A1 0 100 200 300 400 500 mm

AMD	DESCRIPTION	DESIGNER SIGN / DATE	VERIFIED SIGN / DATE	APPROVED SIGN / DATE
B	STAGE 2R ISSUE	PJ 03/03	NJ 03/03	KC 03/03
A	STAGE 2 ISSUE	PJ 11/11	NJ 11/11	KC 11/11

CO-ORDINATE SYSTEM: *MGA Zone 56* | HEIGHT DATUM: *A.H.D.* | SCALE: *1 : 10 @ A1*

CapitalMetro ACT Government

CANBERRA METRO Move | Live | Grow

This drawing is confidential and shall only be used for the purpose of this project. The signing of this title block confirms the design and drafting of this project have been prepared and checked in accordance with the Architectus quality assurance system to ISO 9001-2008.

architectus™

DRAWN	PAUL JENKINS	03/03/2017
DESIGNED	PAUL JENKINS	03/03/2017
DRG CHECK	NIGEL JUSTINS	03/03/2017
DESIGN CHECK	TRENT RUSSELL	03/03/2017
APPROVED	KEVIN CURRUCAN	03/03/2017

CAPITAL METRO PROJECT

PACKAGE 55 - TYPICAL DETAILS

ARCHITECTURAL

WINDSCREENS DETAILS

TYPICAL ISLAND PLATFORM - WEATHER PROTECTION SCREENS

FILE No. 160117 | SHEET: OF | A1

STATUS: STAGE 2R ©

DRG No. 03-ARC-DRW-ARC-SP-8642 | B | EDMS No.

DF 801*554

File Plotted C:\Users\PaulJenkins\Documents\160117_Typical Details_pauljenkins.rvt

Plot Date & Time 3/3/2017 1:21:52 PM

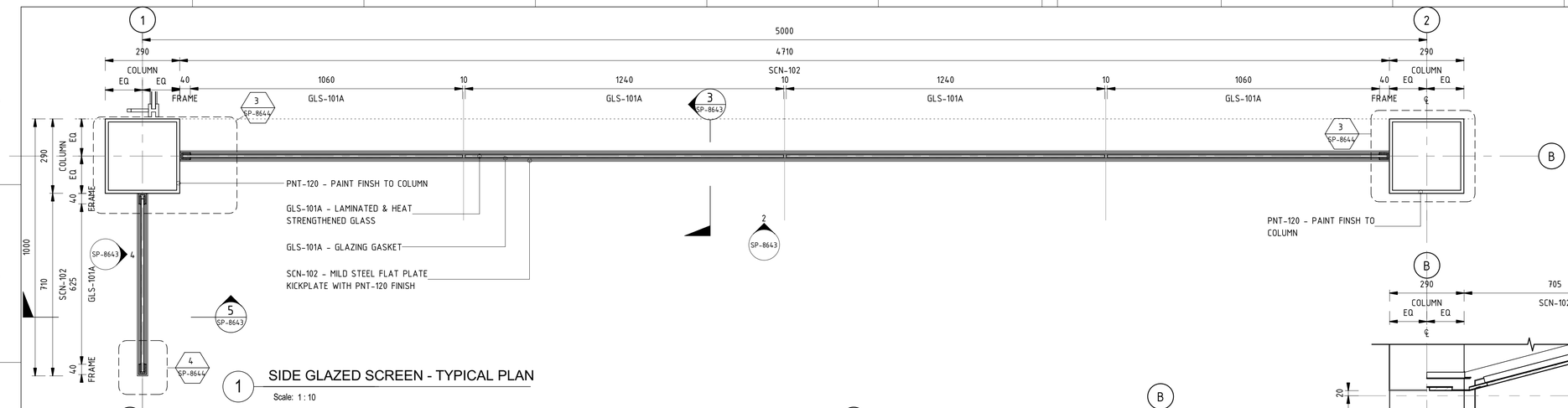

1 SIDE GLAZED SCREEN - TYPICAL PLAN

Scale: 1 : 10

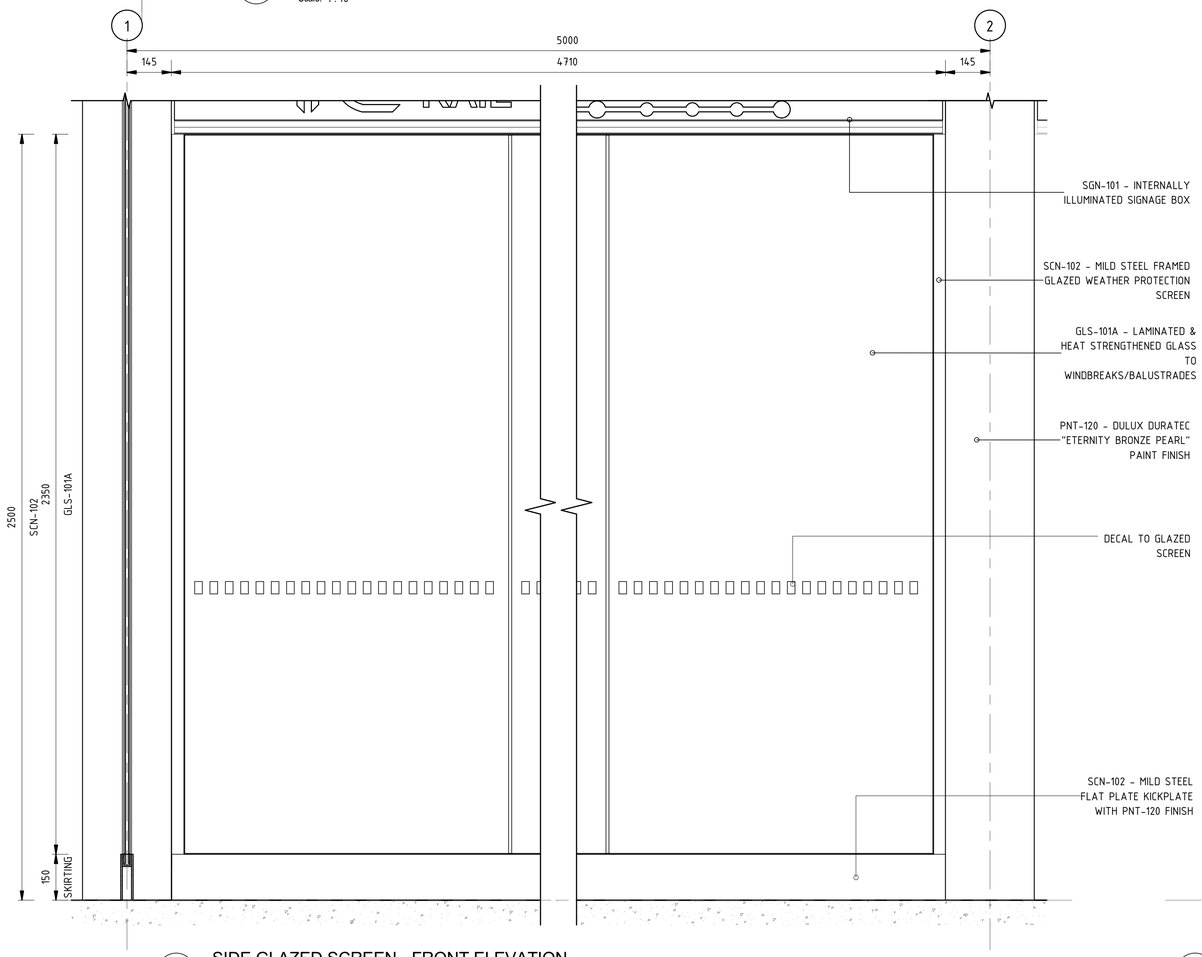

2 SIDE GLAZED SCREEN - FRONT ELEVATION

Scale: 1 : 10

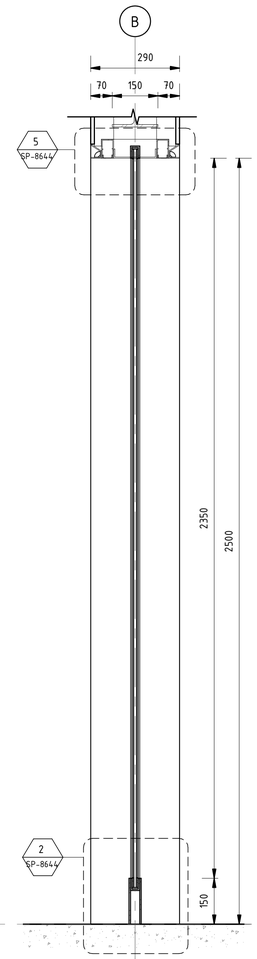

3 SIDE SCREEN AT SIGNAGE

Scale: 1 : 10

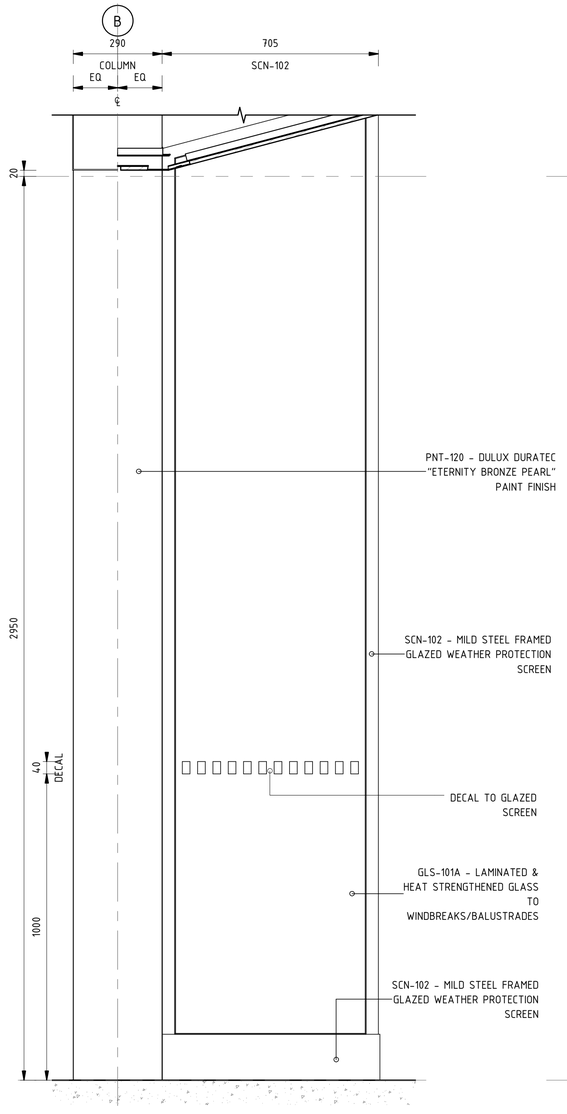

4 SIDE SCREEN - SIDE ELEVATION

Scale: 1 : 10

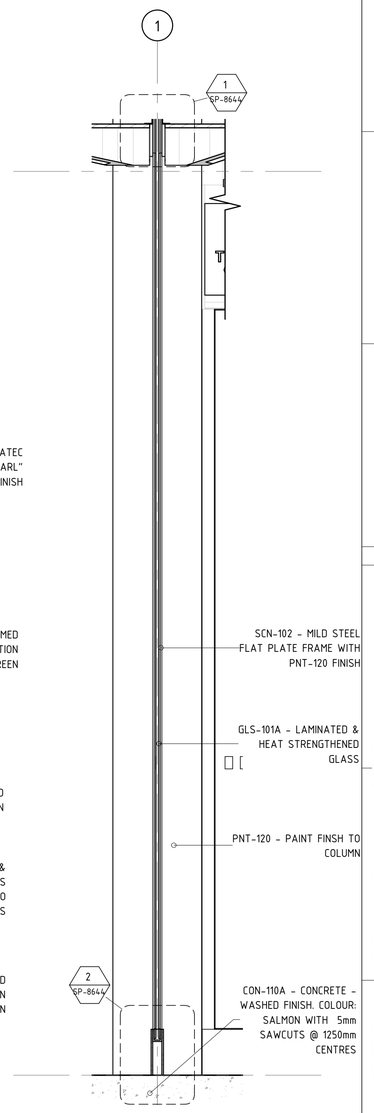

5 SIDE SCREEN AT CANOPY

Scale: 1 : 10

DRAWING COLOUR CODED - PRINT ALL COPIES IN COLOUR

SCALES AT A1 SIZE DRAWING

1:10 @ A1 0 100 200 300 400 500 mm

AMD	DESCRIPTION	DESIGNER SIGN / DATE	VERIFIED SIGN / DATE	APPROVED SIGN / DATE
B	STAGE 2R ISSUE	PJ 03/03	NJ 03/03	KC 03/03
A	STAGE 2 ISSUE	PJ 11/11	NJ 11/11	KC 11/11

CO-ORDINATE SYSTEM: *MGA Zone 56* | HEIGHT DATUM: *A.H.D.* | SCALE: *1 : 10 @ A1*

CapitalMetro ACT Government

CANBERRA METRO Move | Live | Grow

This drawing is confidential and shall only be used for the purpose of this project. The signing of this title block confirms the design and drafting of this project have been prepared and checked in accordance with the Architectus quality assurance system to ISO 9001-2008.

architectus™

DRAWN	PAUL JENKINS	03/03/2017
DESIGNED	PAUL JENKINS	03/03/2017
DRG CHECK	NIGEL JUSTINS	03/03/2017
DESIGN CHECK	TRENT RUSSELL	03/03/2017
APPROVED	KEVIN CURRUCAN	03/03/2017

CAPITAL METRO PROJECT

PACKAGE 55 - TYPICAL DETAILS

ARCHITECTURAL WINDSCREENS DETAILS

TYPICAL SIDE PLATFORM - WEATHER PROTECTION SCREENS

FILE No. 160117 | SHEET: OF | A1

STATUS: STAGE 2R | ©

DRG No. 03-ARC-DRW-ARC-SP-8643 | B | EDMS No.

DF 801*554

File Plotted C:\Users\PaulJenkins\Documents\160117_Typical Details_paulJenkins.rvt

Plot Date & Time 3/3/2017 1:21:58 PM

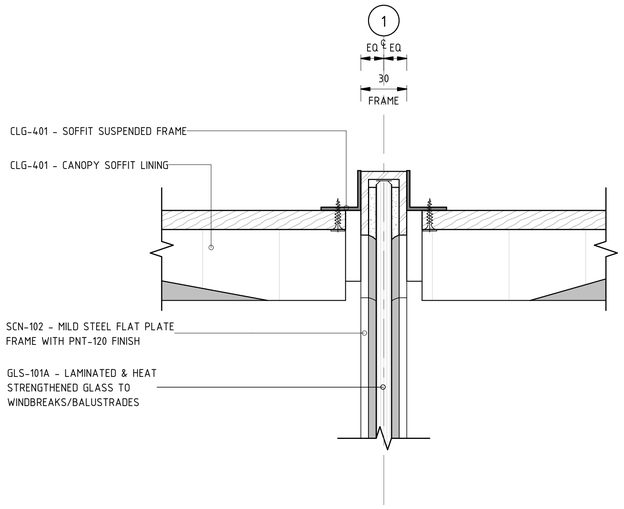

1 HEAD DETAIL - GLAZED SCREEN TO TIMBER SOFFIT

Scale: 1 : 2

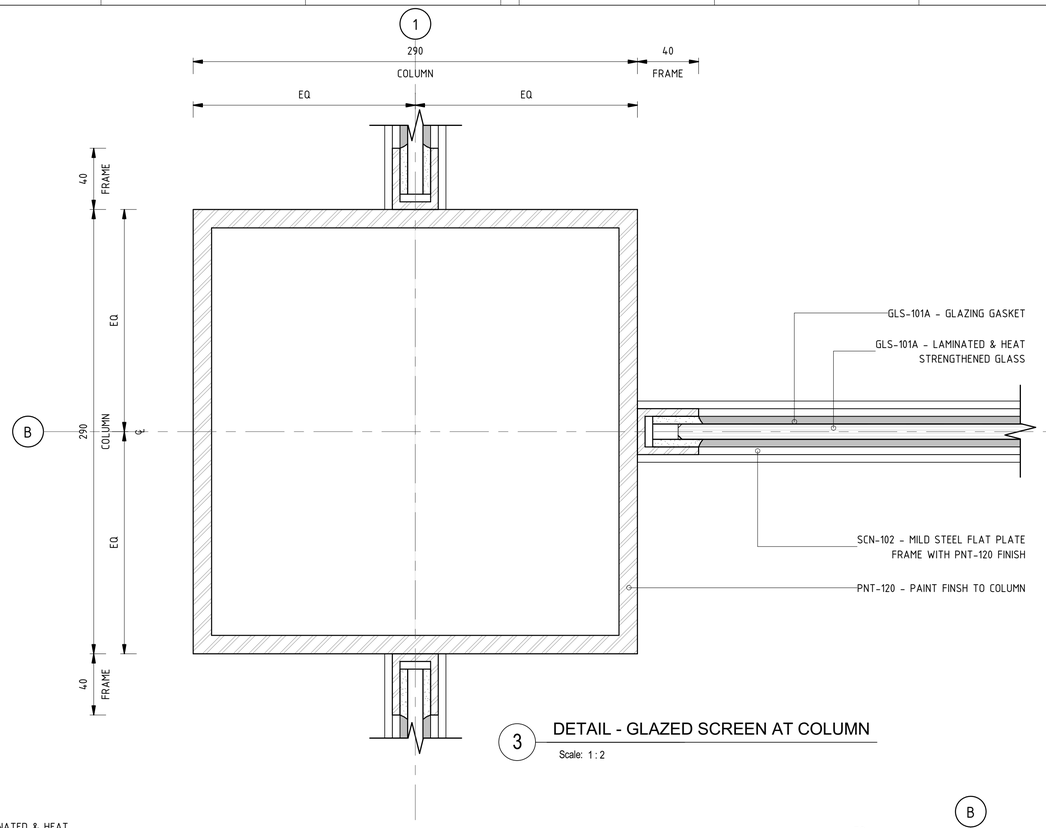

3 DETAIL - GLAZED SCREEN AT COLUMN

Scale: 1 : 2

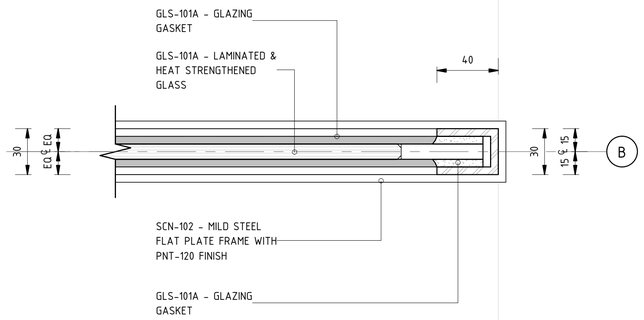

4 DETAIL - GLAZED SCREEN END

Scale: 1 : 2

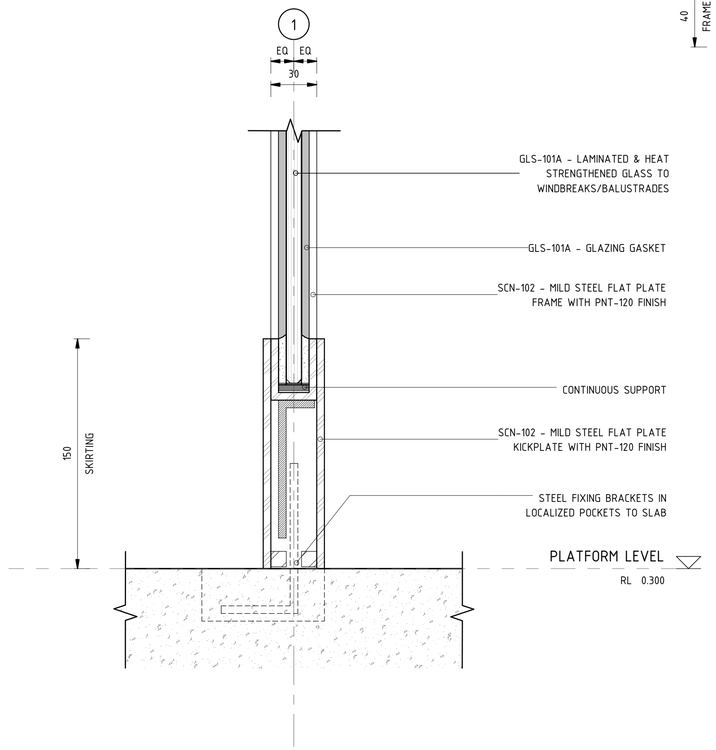

2 BASE DETAIL - GLAZED SCREEN TO PLATFORM SLAB

Scale: 1 : 2

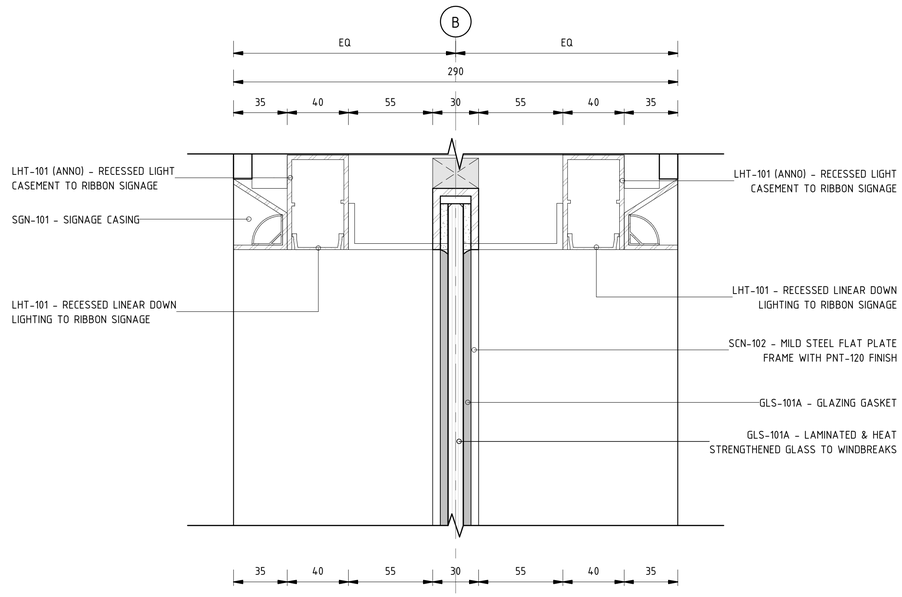

5 HEAD DETAIL - ISLAND GLAZED SCREEN TO RIBBON SIGNAGE

Scale: 1 : 2

SCALES AT A1 SIZE DRAWING

1:250 @ A1 0 2.5 5 7.5 10 12.5 m

N

DRAWING COLOUR CODED - PRINT ALL COPIES IN COLOUR

AMD	DESCRIPTION	DESIGNER SIGN / DATE	VERIFIED SIGN / DATE	APPROVED SIGN / DATE
A	STAGE 2R ISSUE	PJ 03/03	NJ 03/03	KC 03/03

CO-ORDINATE SYSTEM: *MGA Zone 56* | HEIGHT DATUM: *A.H.D.* | SCALE: *1 : 2 @ A1*

CapitalMetro ACT Government

CANBERRA METRO Move | Live | Grow

This drawing is confidential and shall only be used for the purpose of this project. The signing of this title block confirms the design and drafting of this project have been prepared and checked in accordance with the Architectus quality assurance system to ISO 9001-2008.

architectus™

DRAWN	PAUL JENKINS	03/03/2017
DESIGNED	PAUL JENKINS	03/03/2017
DRG CHECK	NIGEL JUSTINS	03/03/2017
DESIGN CHECK	TRENT RUSSELL	03/03/2017
APPROVED	KEVIN CURRUCAN	03/03/2017

CAPITAL METRO PROJECT

PACKAGE 55 - TYPICAL DETAILS

ARCHITECTURAL

WINDSCREENS DETAILS

TYPICAL WEATHER PROTECTION SCREEN DETAILS

FILE No. 160117 | SHEET: OF | A1

STATUS: STAGE 2R | ©

DRG No. 03-ARC-DRW-ARC-SP-8644 | A | EDMS No.

DF 801*554

File Plotted C:\Users\PaulJenkins\Documents\160117_Typical Details_pauljenkins.rvt

Plot Date & Time 3/3/2017 1:22:05 PM

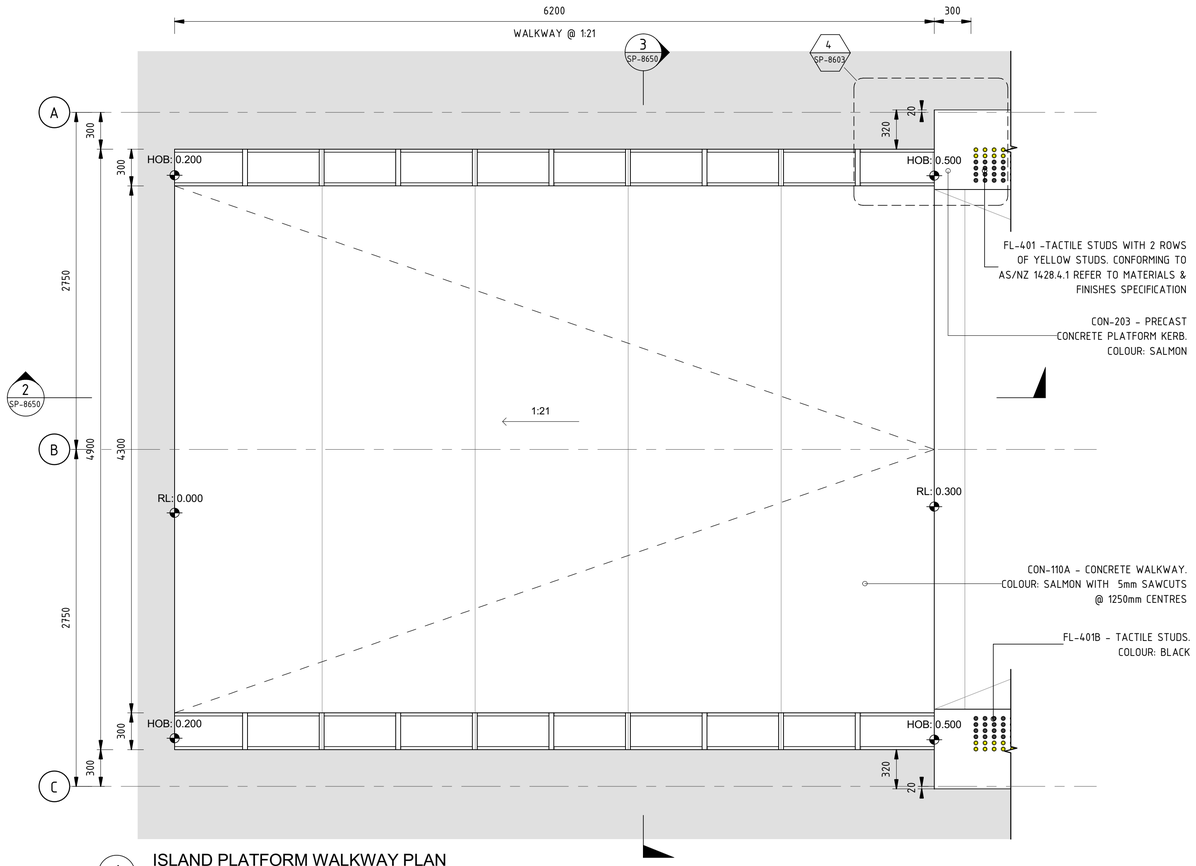

1 ISLAND PLATFORM WALKWAY PLAN

Scale: 1 : 25

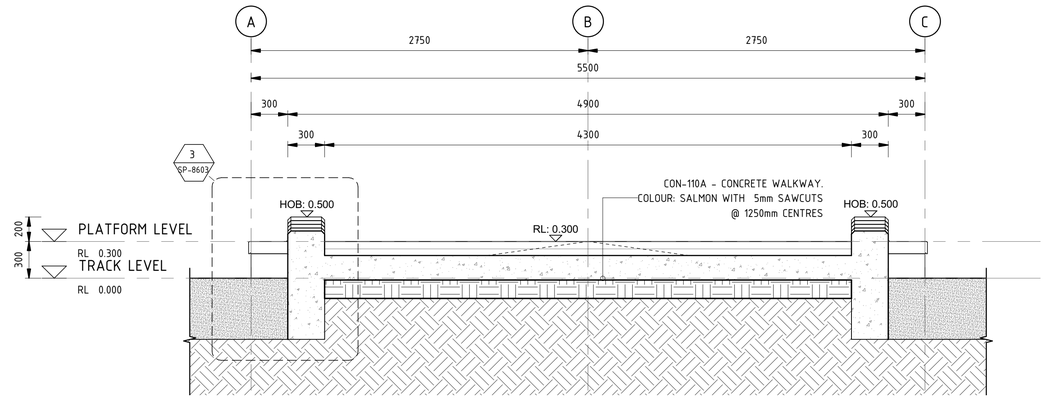

3 ISLAND WALKWAY SECTION B

Scale: 1 : 25

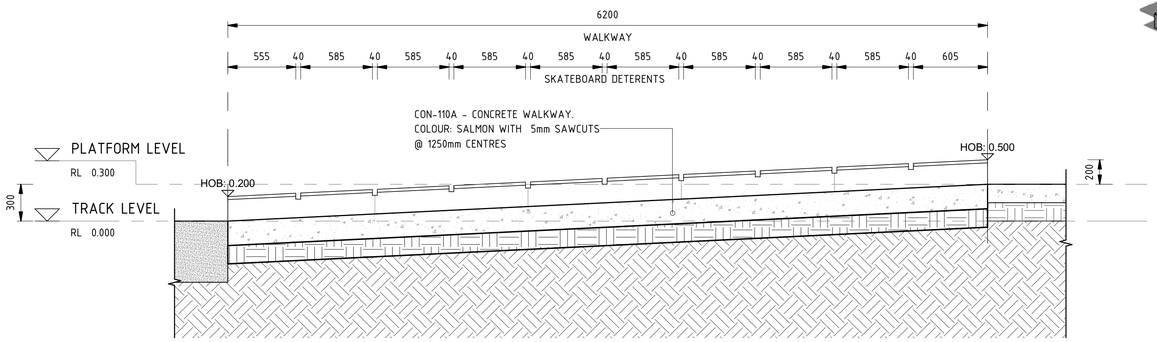

2 ISLAND WALKWAY SECTION A

Scale: 1 : 25

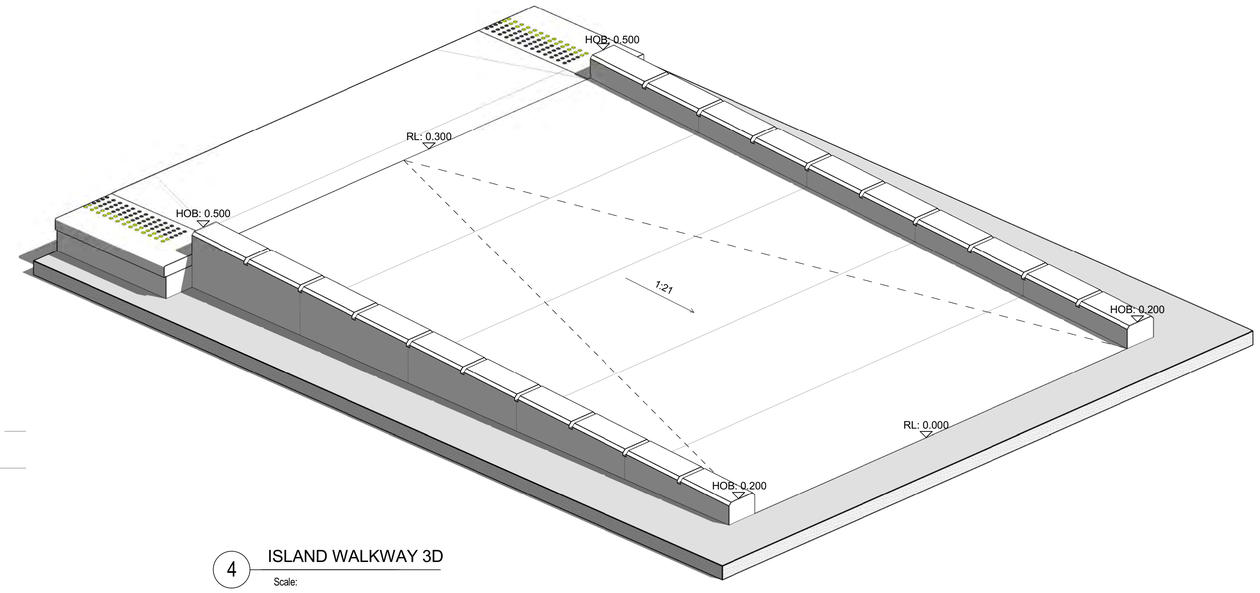

4 ISLAND WALKWAY 3D

Scale:

DRAWING COLOUR CODED - PRINT ALL COPIES IN COLOUR

SCALES AT A1 SIZE DRAWING

1:25 @ A1 0 250 500 750 1000 1250 mm

AMD	DESCRIPTION	DESIGNER SIGN / DATE	VERIFIED SIGN / DATE	APPROVED SIGN / DATE
B	STAGE 2R ISSUE	PJ 03/03	NJ 03/03	KC 03/03
A	STAGE 2 ISSUE	PJ 11/11	NJ 11/11	KC 11/11

CO-ORDINATE SYSTEM: *MGA Zone 56* HEIGHT DATUM: *A.H.D.* SCALE: *1 : 25 @ A1*

CapitalMetro ACT Government

CANBERRA METRO Move | Live | Grow

This drawing is confidential and shall only be used for the purpose of this project. The signing of this title block confirms the design and drafting of this project have been prepared and checked in accordance with the Architectus quality assurance system to ISO 9001-2008.

architectus™

DRAWN	PAUL JENKINS	03/03/2017
DESIGNED	PAUL JENKINS	03/03/2017
DRG CHECK	NIGEL JUSTINS	03/03/2017
DESIGN CHECK	TRENT RUSSELL	03/03/2017
APPROVED	KEVIN CURRUCAN	03/03/2017

CAPITAL METRO PROJECT

PACKAGE 55 - TYPICAL DETAILS

ARCHITECTURAL WALKWAY DETAILS

TYPICAL ISLAND PLATFORM WALKWAY - DETAILS

FILE No. 160117 SHEET: OF A1

STATUS: STAGE 2R C

DRG No. 03-ARC-DRW-ARC-SP-8650 B EDMS No.

DF 801*554

File Plotted C:\Users\PaulJenkins\Documents\160117_Typical Details_pauljenkins.rvt

Plot Date & Time 3/3/2017 1:22:16 PM

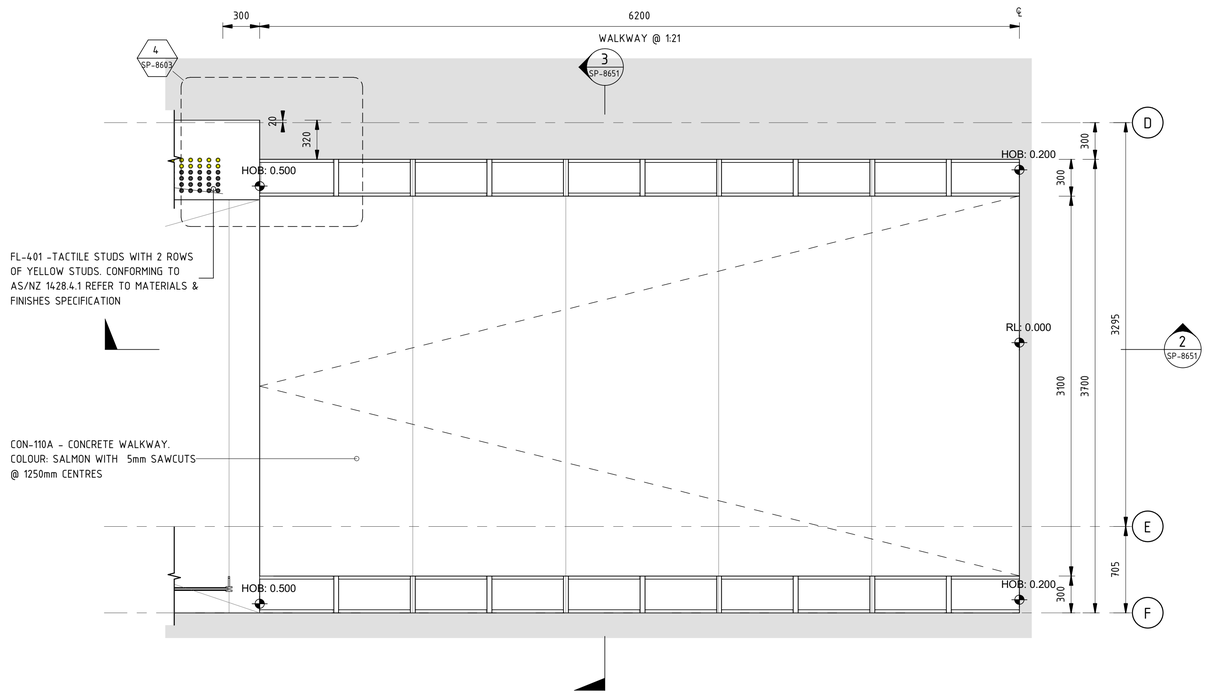

1 SIDE PLATFORM WALKWAY PLAN

Scale: 1 : 25

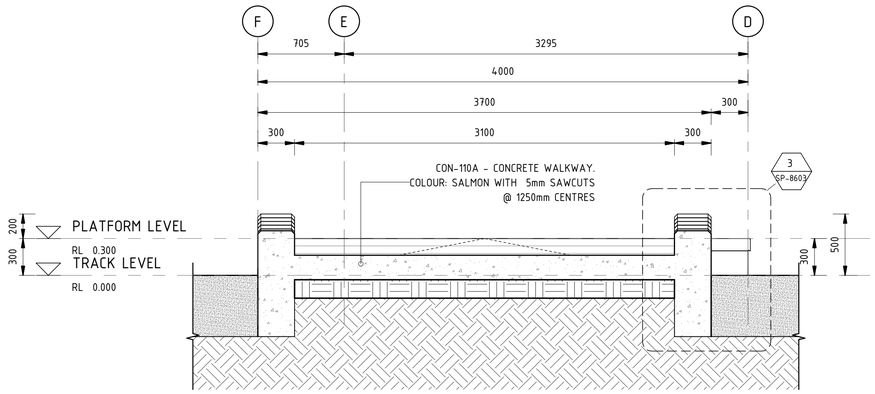

3 SIDE WALKWAY SECTION B

Scale: 1 : 25

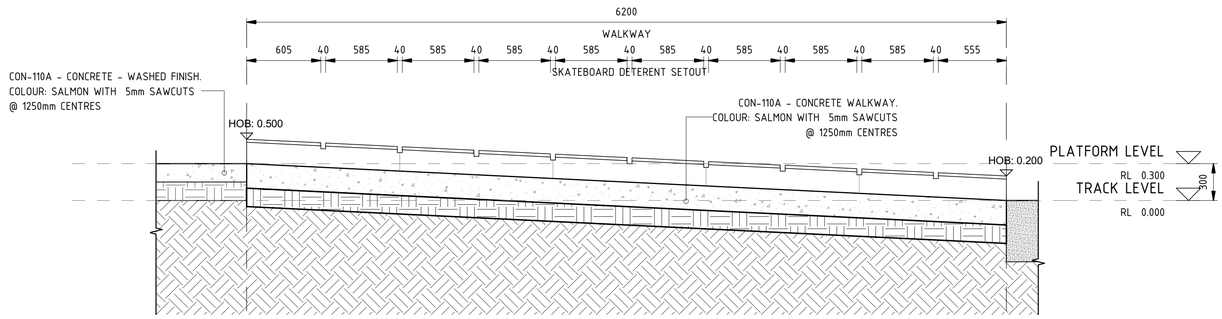

2 SIDE WALKWAY SECTION A

Scale: 1 : 25

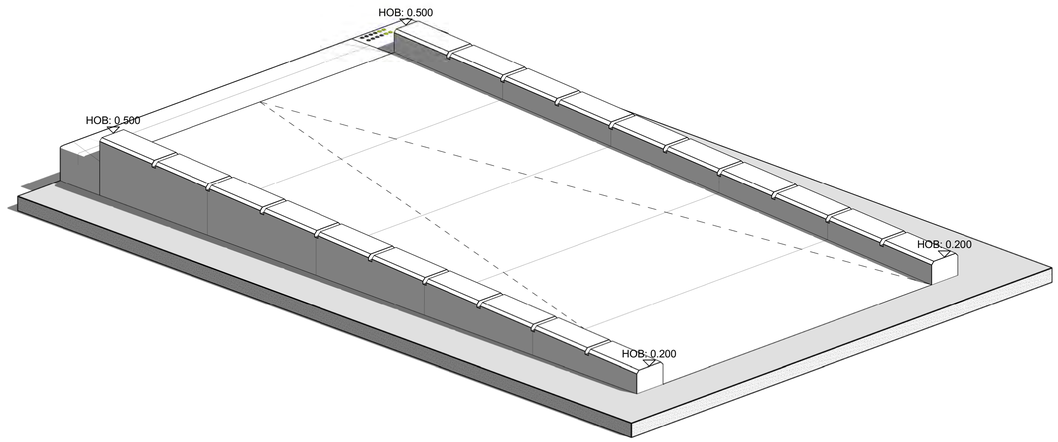

4 DETAIL - SIDE WALKWAY 3D

Scale:

DRAWING COLOUR CODED - PRINT ALL COPIES IN COLOUR

SCALES AT A1 SIZE DRAWING

1:25 @ A1 0 250 500 750 1000 1250 mm

AMD	DESCRIPTION	DESIGNER SIGN / DATE	VERIFIED SIGN / DATE	APPROVED SIGN / DATE
B	STAGE 2R ISSUE	PJ 03/03	NJ 03/03	
A	STAGE 2 ISSUE	PJ 11/11	NJ 11/11	KC 11/11

CO-ORDINATE SYSTEM: *MGA Zone 56* | HEIGHT DATUM: *A.H.D.* | SCALE: *1 : 25 @ A1*

CapitalMetro ACT Government

CANBERRA METRO Move | Live | Grow

This drawing is confidential and shall only be used for the purpose of this project. The signing of this title block confirms the design and drafting of this project have been prepared and checked in accordance with the Architectus quality assurance system to ISO 9001-2008.

architectus™

DRAWN	PAUL JENKINS	03/03/2017
DESIGNED	PAUL JENKINS	03/03/2017
DRG CHECK	Checker	03/03/2017
DESIGN CHECK		03/03/2017
APPROVED	KEVIN CURRUCAN	03/03/2017

CAPITAL METRO PROJECT

PACKAGE 55 - TYPICAL DETAILS

ARCHITECTURAL WALKWAY DETAILS

TYPICAL SIDE PLATFORM WALKWAY - DETAILS

FILE No. 160117 | SHEET: OF | A1

STATUS: STAGE 2R ©

DRG No. 03-ARC-DRW-ARC-SP-8651 | B | EDMS No.

DF 801*554

File Plotted C:\Users\PaulJenkins\Documents\160117_Typical Details_pauljenkins.rvt

Plot Date & Time 3/3/2017 1:23:11 PM

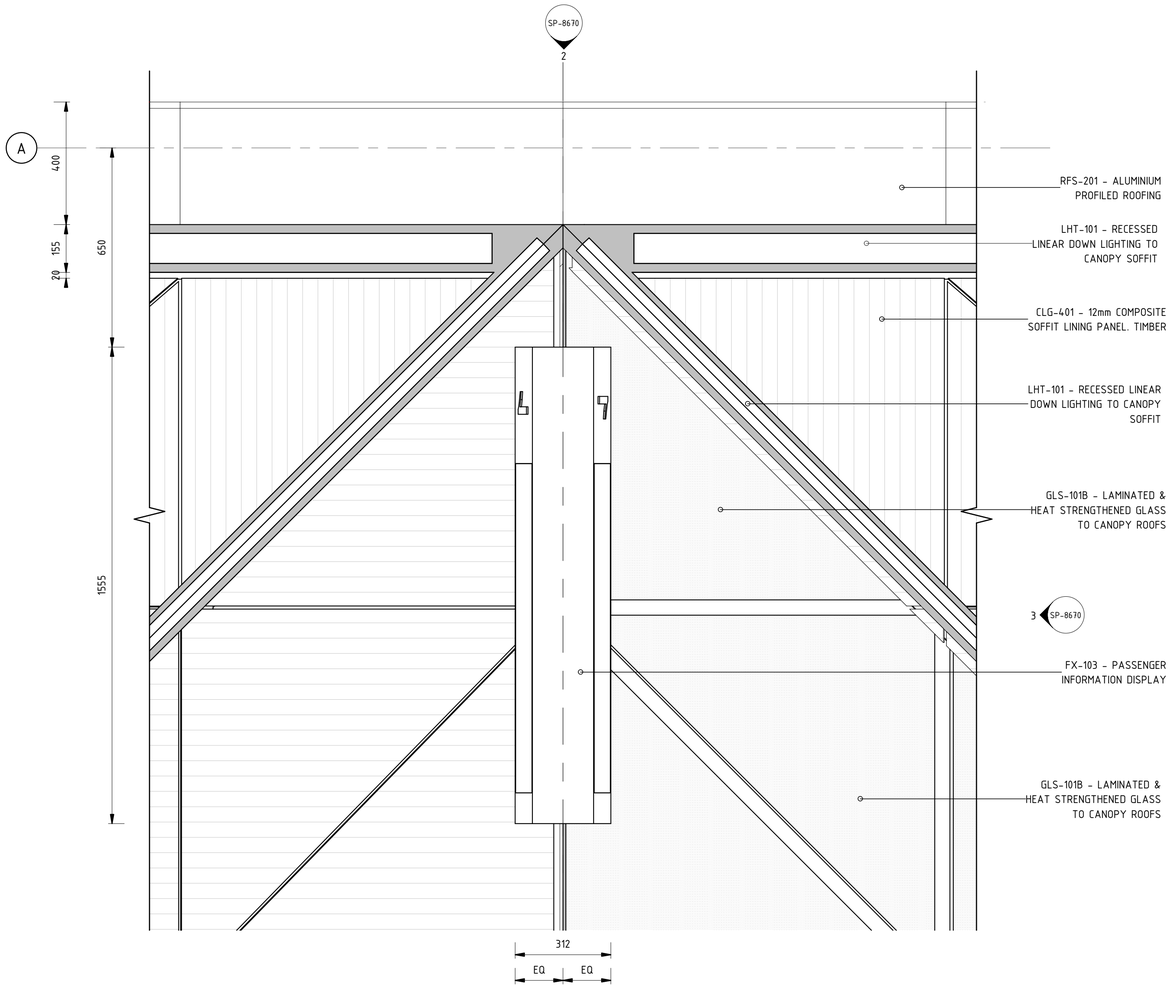

1 TYPICAL PID RCP

Scale: 1 : 10

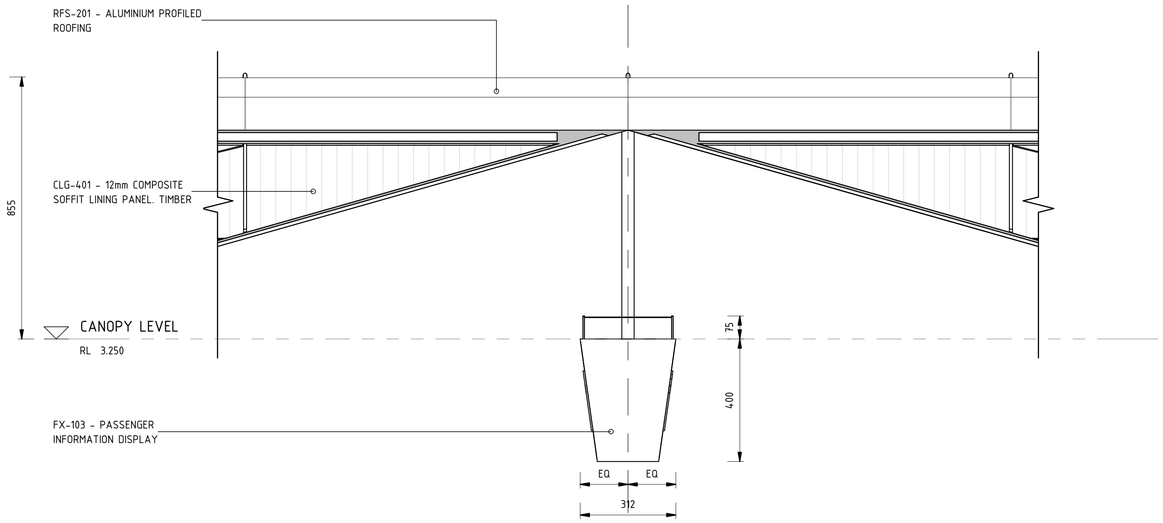

2 TYPICAL PID FRONT ELEVATION

Scale: 1 : 10

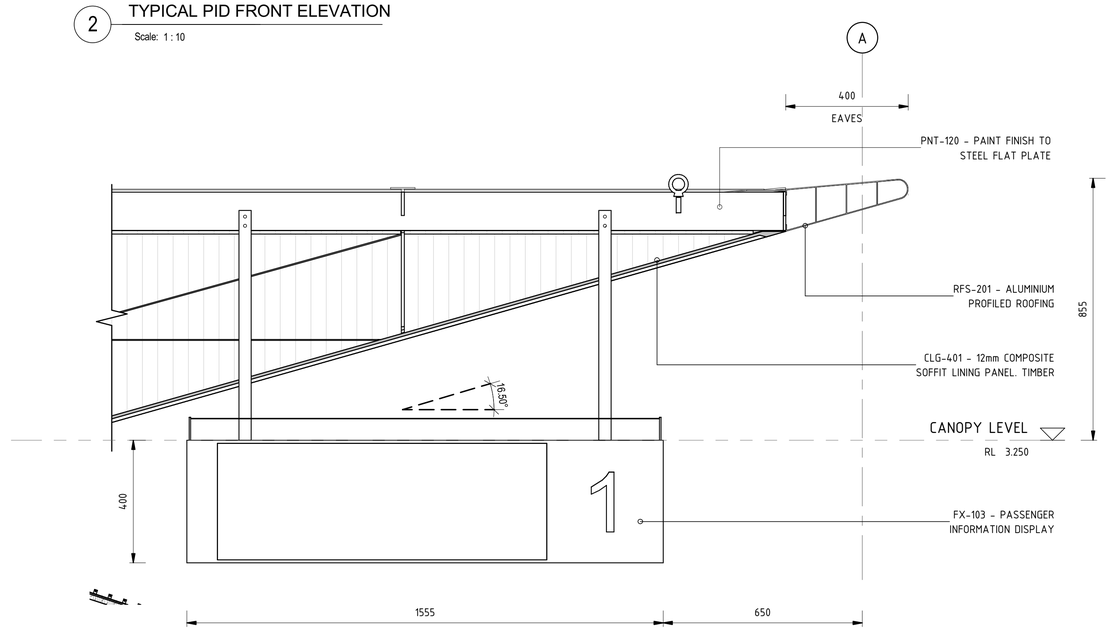

3 TYPICAL PID SIDE ELEVATION

Scale: 1 : 10

DRAWING COLOUR CODED - PRINT ALL COPIES IN COLOUR

AMD	DESCRIPTION	DESIGNER SIGN / DATE	VERIFIED SIGN / DATE	APPROVED SIGN / DATE
A	STAGE 2 ISSUE	PJ 11/11	NJ 11/11	KC 11/11

CO-ORDINATE SYSTEM: *MGA Zone 56* | HEIGHT DATUM: *A.H.D.* | SCALE: *1 : 10 @ A1*

CapitalMetro ACT Government

CANBERRA METRO Move | Live | Grow

This drawing is confidential and shall only be used for the purpose of this project. The signing of this title block confirms the design and drafting of this project have been prepared and checked in accordance with the Architectus quality assurance system to ISO 9001-2008.

architectus™

DRAWN	PAUL JENKINS	03/03/2017
DESIGNED	PAUL JENKINS	03/03/2017
DRG CHECK	Checker	03/03/2017
DESIGN CHECK		03/03/2017
APPROVED	KEVIN CURRUCAN	03/03/2017

CAPITAL METRO PROJECT

PACKAGE 55 - TYPICAL DETAILS

ARCHITECTURAL

CANOPY DETAILS

TYPICAL PLATFORM PID -DETAILS

FILE No. 160117 | SHEET: OF | A1

STATUS: STAGE 2R | ©

DRG No. 03-ARC-DRW-ARC-SP-8670 | A | EDMS No.

DF 801*554

File Plotted C:\Users\PaulJenkins\Documents\160117_Typical Details_pauljenkins.rvt

Plot Date & Time 3/3/2017 1:22:57 PM

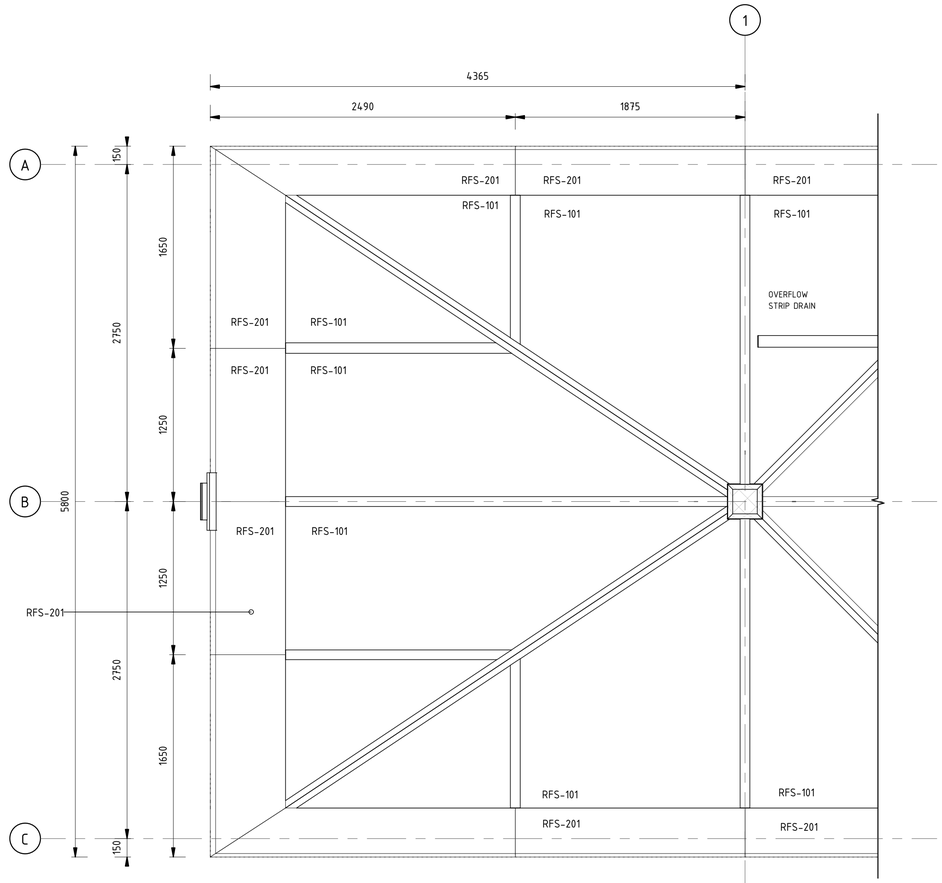

1 ISLAND CANOPY PLAN

Scale: 1 : 25

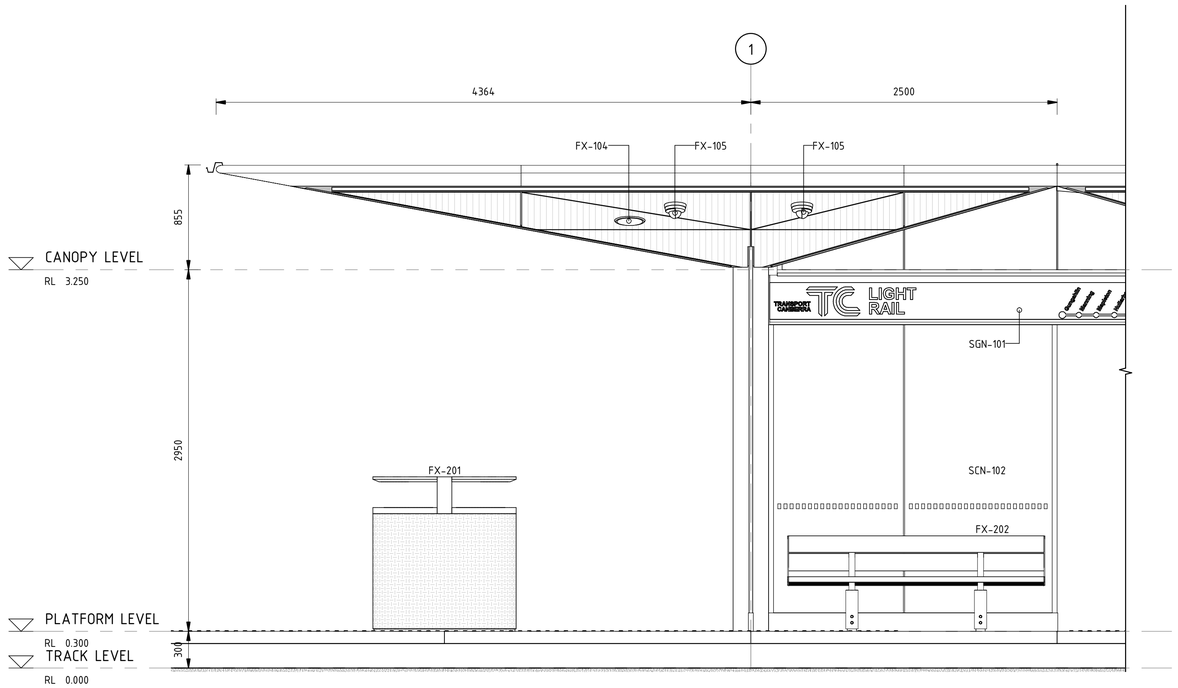

2 ISLAND MODULE ELEVATION LADDER ACCESS

Scale: 1 : 25

File Plotted C:\Users\PaulJenkins\Documents\160117_Typical Details_pauljenkins.rvt

Plot Date & Time 3/3/2017 1:23:48 PM

DRAWING COLOUR CODED - PRINT ALL COPIES IN COLOUR

SCALES AT A1 SIZE DRAWING

1:25 @ A1 0 250 500 750 1000 1250 mm

AMD	DESCRIPTION	DESIGNER SIGN / DATE	VERIFIED SIGN / DATE	APPROVED SIGN / DATE
A	STAGE 2R ISSUE	PJ 03/03	NJ 03/03	KC 03/03

CO-ORDINATE SYSTEM: *MGA Zone 56* | HEIGHT DATUM: *A.H.D.* | SCALE: *1 : 25 @ A1*

CapitalMetro ACT Government

CANBERRA METRO Move | Live | Grow

This drawing is confidential and shall only be used for the purpose of this project. The signing of this title block confirms the design and drafting of this project have been prepared and checked in accordance with the Architectus quality assurance system to ISO 9001-2008.

architectus™

DRAWN	PAUL JENKINS	03/03/2017
DESIGNED	PAUL JENKINS	03/03/2017
DRG CHECK	NIGEL JUSTINS	03/03/2017
DESIGN CHECK	TRENT RUSSELL	03/03/2017
APPROVED	KEVIN CURRUCAN	03/03/2017

CAPITAL METRO PROJECT

PACKAGE 55 - TYPICAL DETAILS

ARCHITECTURAL

CANOPY ACCESS

ISLAND PLATFORM ROOF ACCESS

FILE No. 160117 | SHEET: OF | A1

STATUS: STAGE 2R | ©

DRG No. 03-ARC-DRW-ARC-SP-8680 | A | EDMS No.

DF 801*554

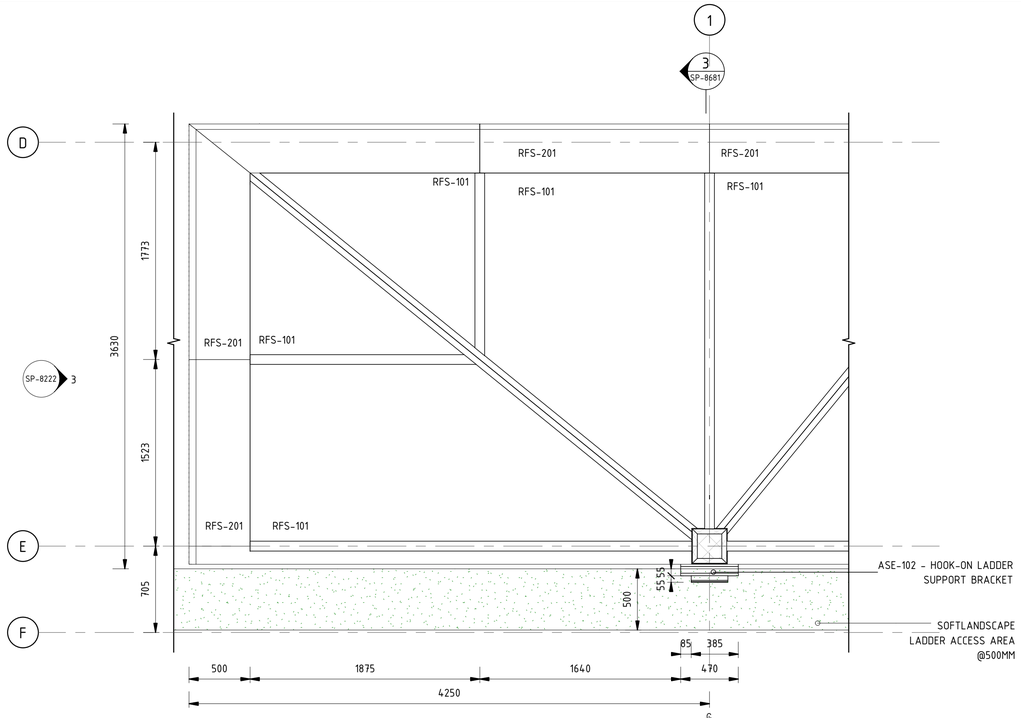

1 ISLAND PLATFORM CANOPY PLAN

Scale: 1 : 25

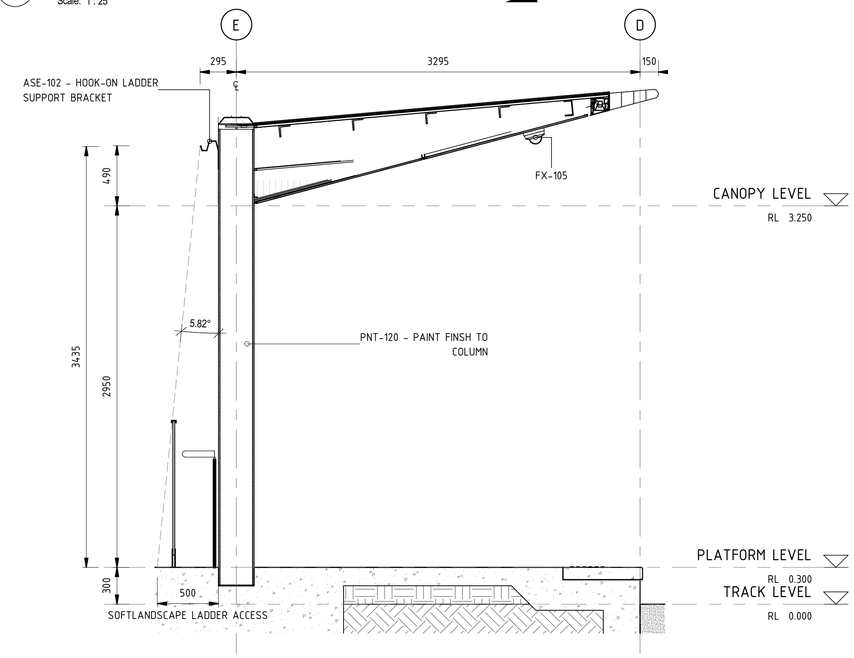

3 SIDE PLATFORM SECTION_LADDER ACCESS BRACKET

Scale: 1 : 25

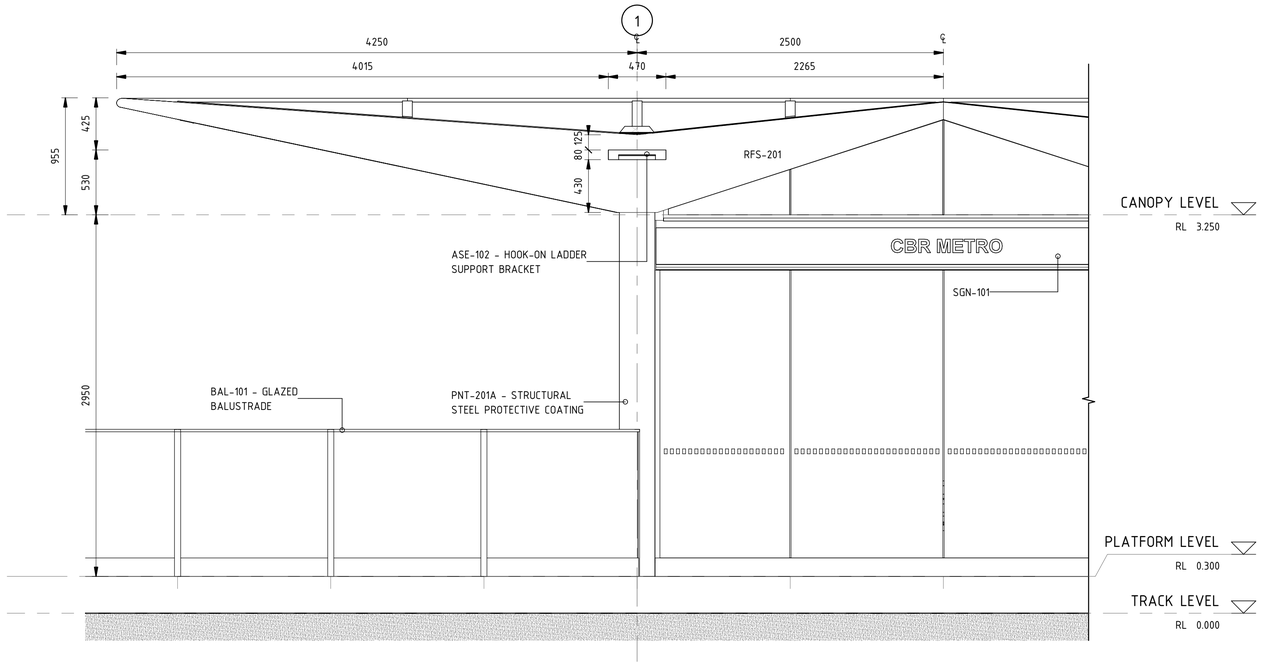

2 SIDE PLATFORM ELEVATION 04

Scale: 1 : 25

DRAWING COLOUR CODED - PRINT ALL COPIES IN COLOUR

SCALES AT A1 SIZE DRAWING

1:25 @ A1 0 250 500 750 1000 1250 mm

AMD	DESCRIPTION	DESIGNER SIGN / DATE	VERIFIED SIGN / DATE	APPROVED SIGN / DATE
A	STAGE 2R ISSUE	PJ 03/03	NJ 03/03	KC 03/03

CO-ORDINATE SYSTEM: *MGA Zone 56* | HEIGHT DATUM: *A.H.D.* | SCALE: *1 : 25 @ A1*

CapitalMetro ACT Government

CANBERRA METRO Move | Live | Grow

This drawing is confidential and shall only be used for the purpose of this project. The signing of this title block confirms the design and drafting of this project have been prepared and checked in accordance with the Architectus quality assurance system to ISO 9001-2008.

architectus™

DRAWN	PAUL JENKINS	03/03/2017
DESIGNED	PAUL JENKINS	03/03/2017
DRG CHECK	NIGEL JUSTINS	03/03/2017
DESIGN CHECK	TRENT RUSSELL	03/03/2017
APPROVED	KEVIN CURRUCAN	03/03/2017

CAPITAL METRO PROJECT

PACKAGE 55 - TYPICAL DETAILS

ARCHITECTURAL

CANOPY ACCESS

SIDE PLATFORM ROOF ACCESS

FILE No. 160117 | SHEET: OF | A1

STATUS: STAGE 2R | ©

DRG No. 03-ARC-DRW-ARC-SP-8681 | A | EDMS No.

DF 801*554

File Plotted C:\Users\PaulJenkins\Documents\160117_Typical Details_pauljenkins.rvt

Plot Date & Time 3/3/2017 1:24:00 PM

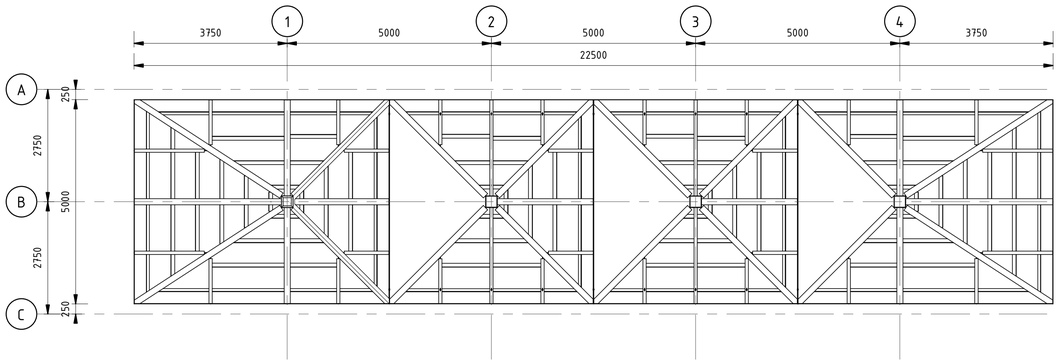

2 ISLAND STRUCTURAL KEYPLAN

Scale: 1 : 75

STRUCTURAL COMPONENT LEGEND

CLM01 - 290mm SQUARE COLUMN

PFC02 - 125mm PFC FIXED TO RAFTERS

FPL01 - ISLAND MODULE 125x8mm FLAT PLATE FIXED TO RAFTER

PRL01 - 90mm EQUAL ANGLE PURLIN FIXED TO RAFTERS

RFT01 - EXTENDED DIAGONAL SIDE MODULE TAPERED RAFTER FIXED TO COLUMN

RFT05 - SIDE MODULE 360UB x 171mm WIDE PLATE TAPERED RAFTER FIXED TO COLUMN

RFT04 - 150mm MID MODULE RAFTER FIXED TO COLUMN

** NOTE: REFER TO MATERIALS SCHEDULE FOR PROTECTIVE COATING TO STEEL MEMEBERS.

ALL STEEL TO STRUCTURAL ENGINEER'S DESIGN & SPECIFICATION

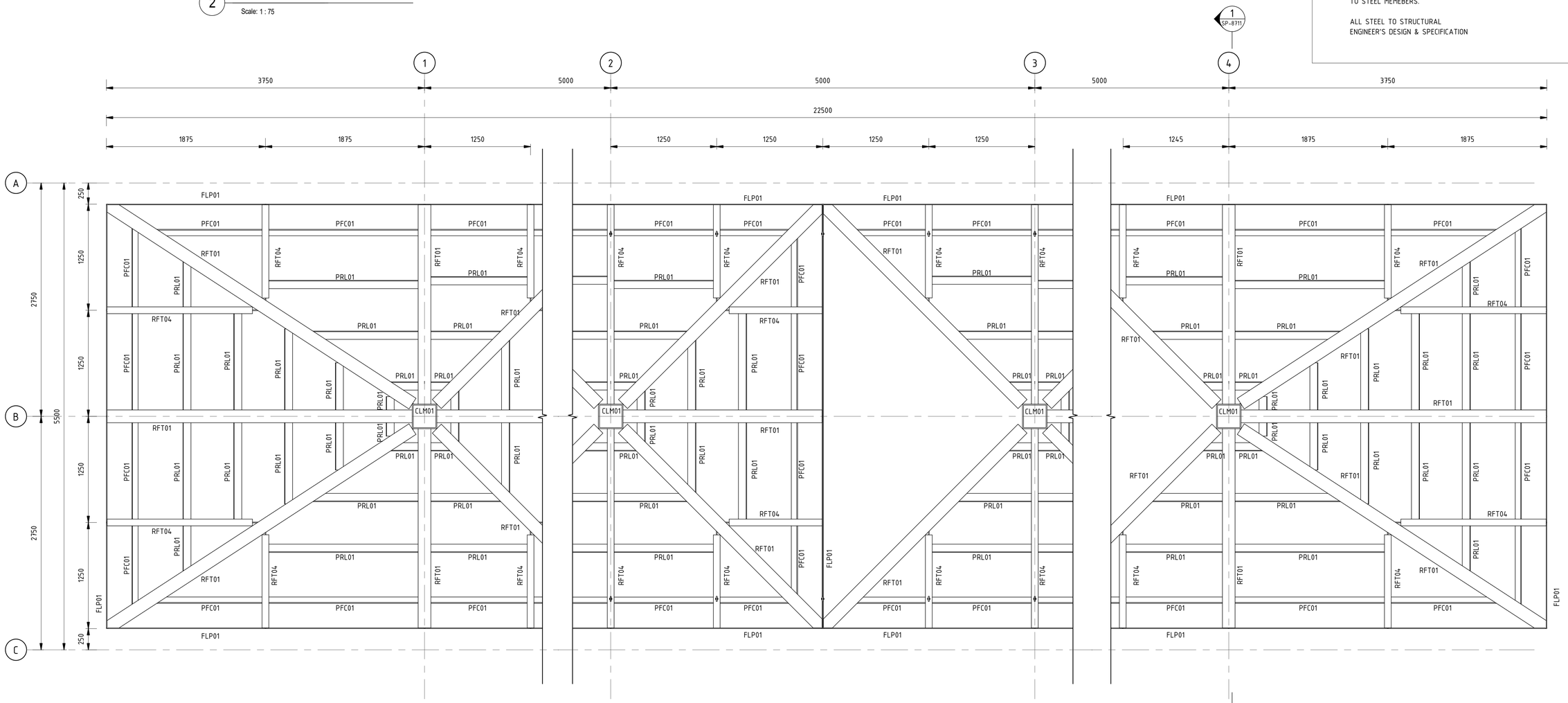

1 STRUCTURAL ISLAND MODULE CANOPY PLAN

Scale: 1 : 25

SCALES AT A1 SIZE DRAWING

1:25 @ A1 0 250 500 750 1000 1250 mm

DRAWING COLOUR CODED - PRINT ALL COPIES IN COLOUR

AMD	DESCRIPTION	DESIGNER SIGN / DATE	VERIFIED SIGN / DATE	APPROVED SIGN / DATE
B	STAGE 2R ISSUE	PJ 03/03	NJ 03/03	KC 03/03
A	STAGE 2 ISSUE	PJ 11/11	NJ 11/11	KC 11/11

CO-ORDINATE SYSTEM: *MGA Zone 56* HEIGHT DATUM: *A.H.D.* SCALE: *As indicated @ A1*

CapitalMetro ACT Government

CANBERRA METRO Move | Live | Grow

This drawing is confidential and shall only be used for the purpose of this project. The signing of this title block confirms the design and drafting of this project have been prepared and checked in accordance with the Architectus quality assurance system to ISO 9001-2008.

architectus™

DRAWN	PAUL JENKINS	03/03/2017
DESIGNED	PAUL JENKINS	03/03/2017
DRG CHECK	NIGEL JUSTINS	03/03/2017
DESIGN CHECK	TRENT RUSSELL	03/03/2017
APPROVED	KEVIN CURRUCAN	03/03/2017

CAPITAL METRO PROJECT

PACKAGE 55 - TYPICAL DETAILS

ARCHITECTURAL

TYPICAL ISLAND MODULE - STRUCTURAL FRAME PLAN

FILE No. 160117 SHEET: OF A1

STATUS: STAGE 2R ©

DRG No. 03-ARC-DRW-ARC-SP-8710 B EDMS No.

DF 801*554

File Plotted C:\Users\PaulJenkins\Documents\160117_Typical Details_pauljenkins.rvt

Plot Date & Time 3/3/2017 1:24:15 PM

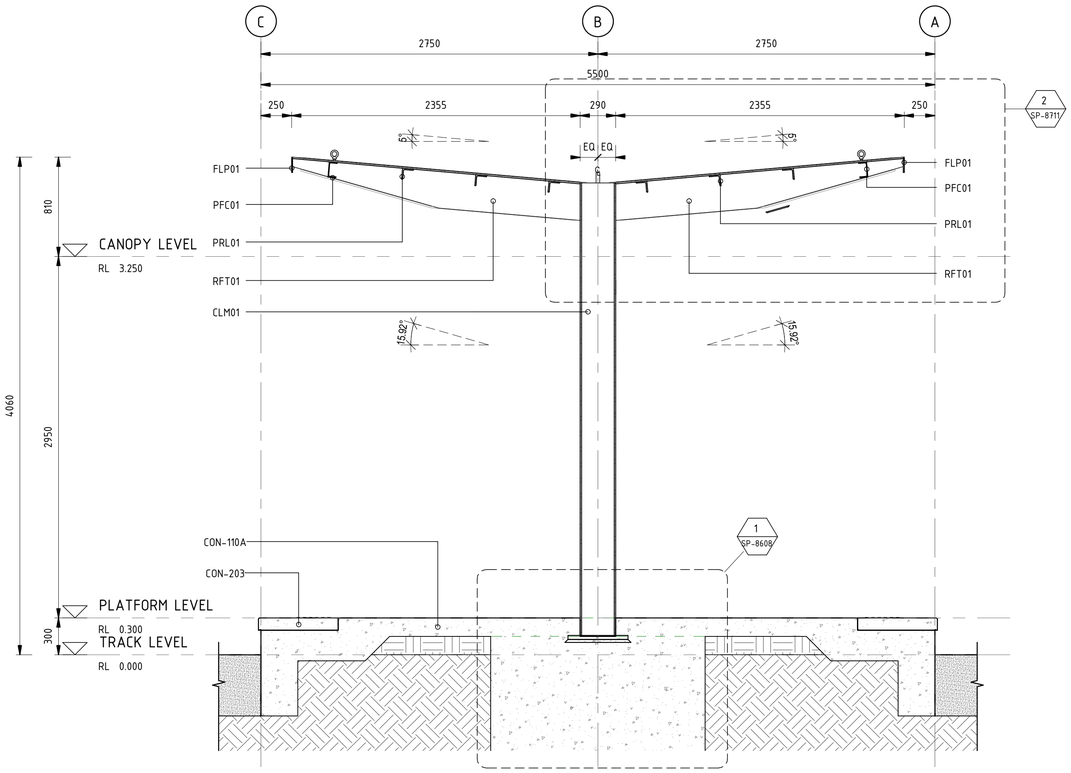

1 ISLAND MODULE - STRUCTURAL SECTION

Scale: 1 : 25

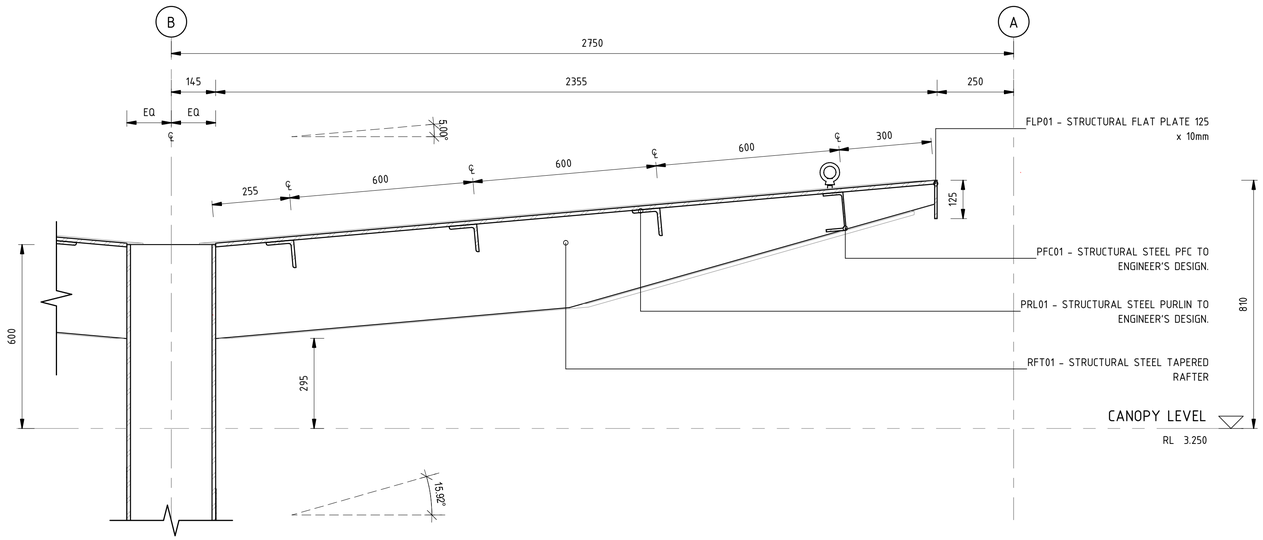

2 ISLAND MODULE - STRUCTURAL DETAIL

Scale: 1 : 10

STRUCTURAL COMPONENT LEGEND

CLM01 - 290mm SQUARE COLUMN

PFC02 - 125mm PFC FIXED TO RAFTERS

FPL01 - ISLAND MODULE 125x8mm FLAT PLATE FIXED TO RAFTER

PRL01 - 90mm EQUAL ANGLE PURLIN FIXED TO RAFTERS

RFT01 - EXTENDED DIAGONAL SIDE MODULE TAPERED RAFTER FIXED TO COLUMN

RFT05 - SIDE MODULE 360UB x 171mm WIDE PLATE TAPERED RAFTER FIXED TO COLUMN

RFT04 - 150mm MID MODULE RAFTER FIXED TO COLUMN

** NOTE: REFER TO MATERIALS SCHEDULE FOR PROTECTIVE COATING TO STEEL MEMEBERS.

ALL STEEL TO STRUCTURAL ENGINEER'S DESIGN & SPECIFICATION

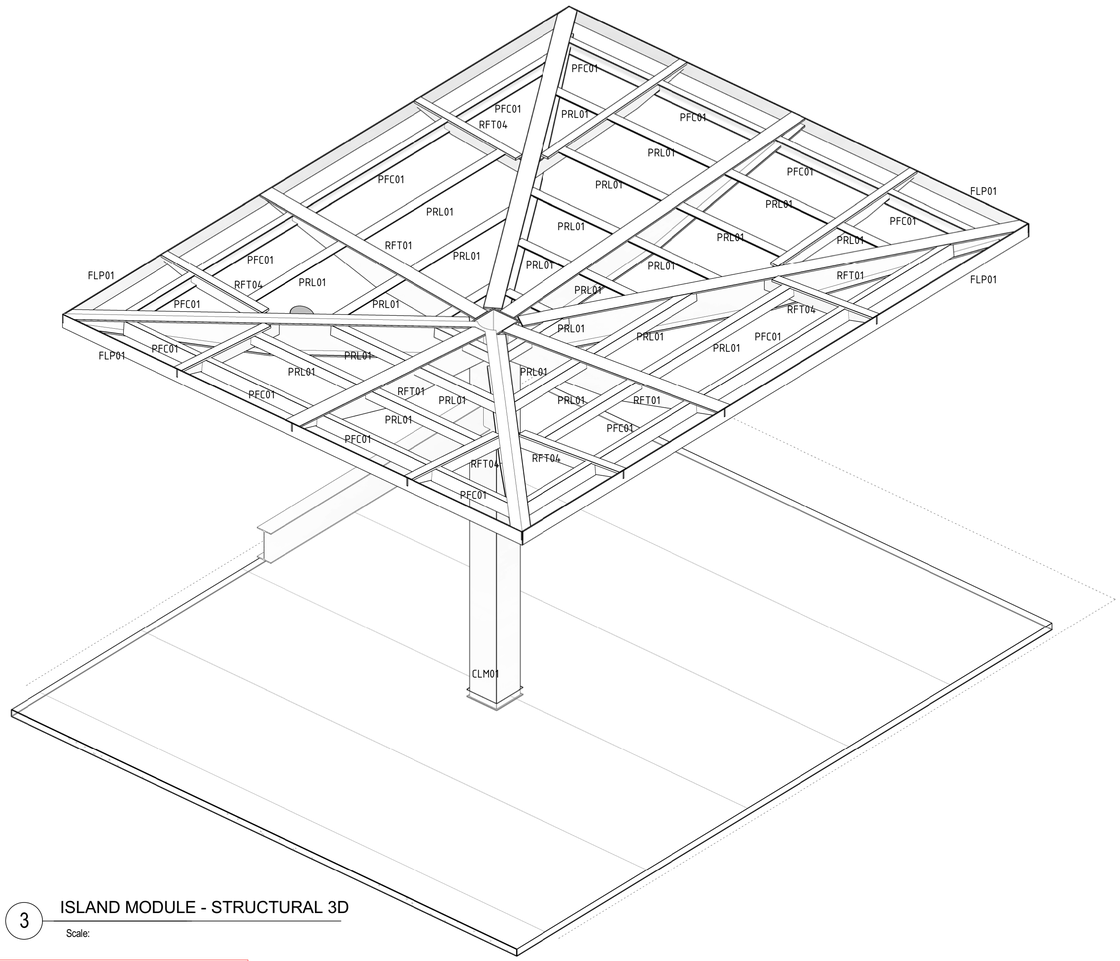

3 ISLAND MODULE - STRUCTURAL 3D

Scale:

DRAWING COLOUR CODED - PRINT ALL COPIES IN COLOUR

AMD	DESCRIPTION	DESIGNER SIGN / DATE	VERIFIED SIGN / DATE	APPROVED SIGN / DATE
B	STAGE 2R ISSUE	PJ 03/03	NJ 03/03	KC 03/03
A	STAGE 2 ISSUE	PJ 11/11	NJ 11/11	KC 11/11

CO-ORDINATE SYSTEM: *MGA Zone 56* | HEIGHT DATUM: *A.H.D.* | SCALE: *As indicated @ A1*

CapitalMetro ACT Government

CANBERRA METRO Move | Live | Grow

This drawing is confidential and shall only be used for the purpose of this project. The signing of this title block confirms the design and drafting of this project have been prepared and checked in accordance with the Architectus quality assurance system to ISO 9001-2008.

architectus™

DRAWN	PAUL JENKINS	03/03/2017
DESIGNED	PAUL JENKINS	03/03/2017
DRG CHECK	NIGEL JUSTINS	03/03/2017
DESIGN CHECK	TRENT RUSSELL	03/03/2017
APPROVED	KEVIN CURRUCAN	03/03/2017

CAPITAL METRO PROJECT

PACKAGE 55 - TYPICAL DETAILS

ARCHITECTURAL

TYPICAL ISLAND MODULE - STRUCTURAL FRAME SECTIONS

FILE No. 160117 | SHEET: OF | A1

STATUS: STAGE 2R | ©

DRG No. 03-ARC-DRW-ARC-SP-8711 | B | EDMS No.

DF 801*554

File Plotted C:\Users\PaulJenkins\Documents\160117_Typical Details_pauljenkins.rvt

Plot Date & Time 3/3/2017 1:24:46 PM

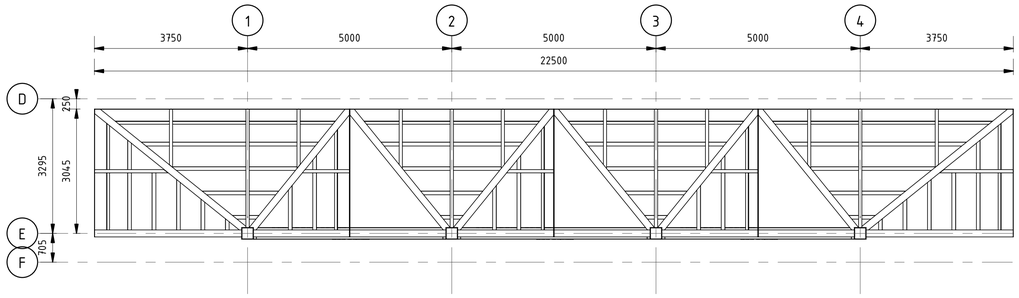

2 SIDE STRUCTURAL KEYPLAN

Scale: 1 : 75

STRUCTURAL COMPONENT LEGEND

CLM01 - 290mm SQUARE COLUMN

PFC02 - 125mm PFC FIXED TO RAFTERS

FPL01 - ISLAND MODULE 125x8mm FLAT PLATE FIXED TO RAFTER

PRL01 - 90mm EQUAL ANGLE PURLIN FIXED TO RAFTERS

RFT01 - EXTENDED DIAGONAL SIDE MODULE TAPERED RAFTER FIXED TO COLUMN

RFT05 - SIDE MODULE 360UB x 171mm WIDE PLATE TAPERED RAFTER FIXED TO COLUMN

RFT04 - 150mm MID MODULE RAFTER FIXED TO COLUMN

** NOTE: REFER TO MATERIALS SCHEDULE FOR PROTECTIVE COATING TO STEEL MEMEBERS.

ALL STEEL TO STRUCTURAL ENGINEER'S DESIGN & SPECIFICATION

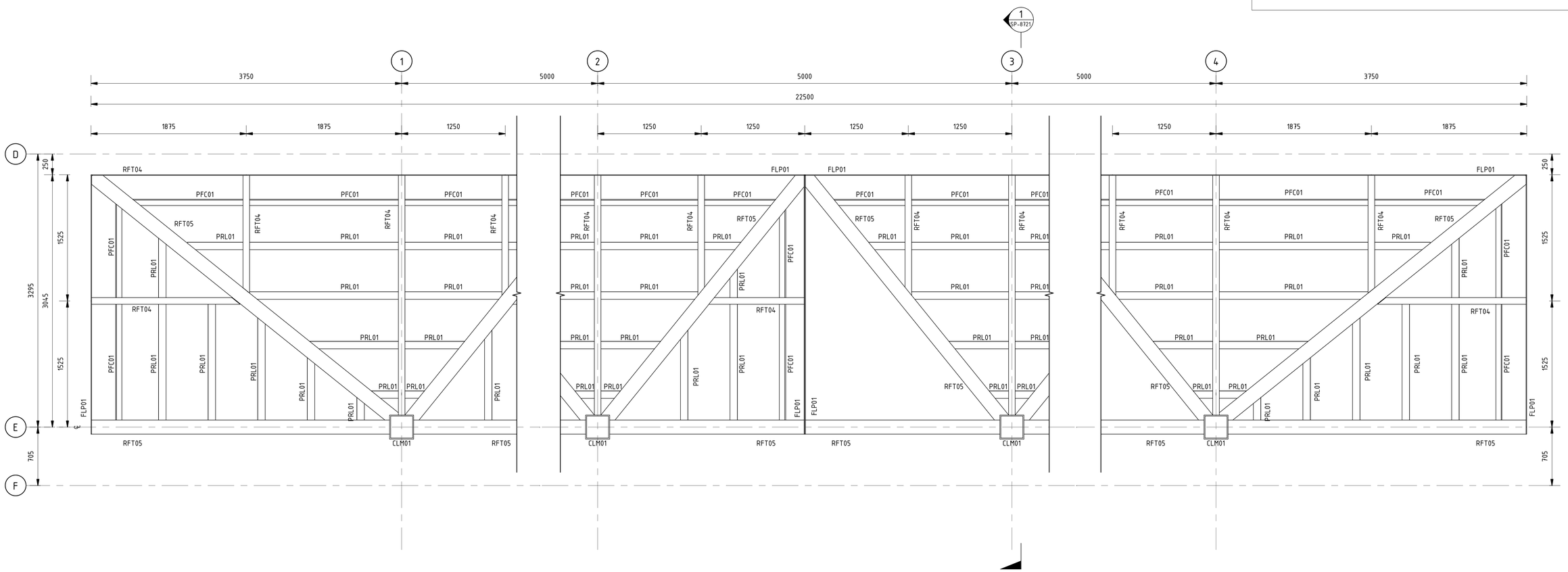

1 STRUCTURAL SIDE MODULE CANOPY PLAN

Scale: 1 : 25

DRAWING COLOUR CODED - PRINT ALL COPIES IN COLOUR

AMD	DESCRIPTION	DESIGNER SIGN / DATE	VERIFIED SIGN / DATE	APPROVED SIGN / DATE
B	STAGE 2R ISSUE	PJ 03/03	NJ 03/03	KC 03/03
A	STAGE 2 ISSUE	PJ 11/11	NJ 11/11	KC 11/11

CO-ORDINATE SYSTEM: *MGA Zone 56* HEIGHT DATUM: *A.H.D.* SCALE: *As indicated @ A1*

CapitalMetro ACT Government

CANBERRA METRO Move | Live | Grow

This drawing is confidential and shall only be used for the purpose of this project. The signing of this title block confirms the design and drafting of this project have been prepared and checked in accordance with the Architectus quality assurance system to ISO 9001-2008.

architectus™

DRAWN	PAUL JENKINS	03/03/2017
DESIGNED	PAUL JENKINS	03/03/2017
DRG CHECK	NIGEL JUSTINS	03/03/2017
DESIGN CHECK	TRENT RUSSELL	03/03/2017
APPROVED	KEVIN CURRUCAN	03/03/2017

CAPITAL METRO PROJECT

PACKAGE 55 - TYPICAL DETAILS

ARCHITECTURAL

TYPICAL SIDE MODULE - STRUCTURAL FRAME PLAN

FILE No. 160117 SHEET: OF A1

STATUS: STAGE 2R ©

DRG No. 03-ARC-DRW-ARC-SP-8720 B EDMS No.

DF 801*554

File Plotted C:\Users\Paul\Jenkins\Documents\160117_Typical Details_paul\jenkins.rvt

Plot Date & Time 3/3/2017 1:25:24 PM

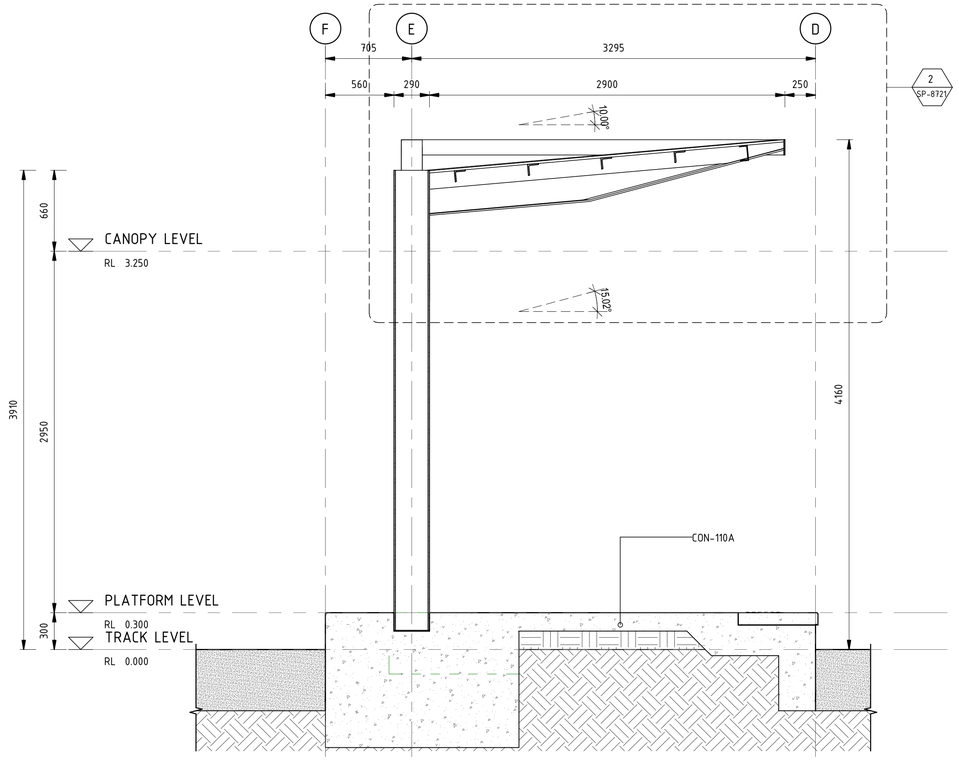

1 SIDE MODULE - STRUCTURAL SECTION

Scale: 1 : 25

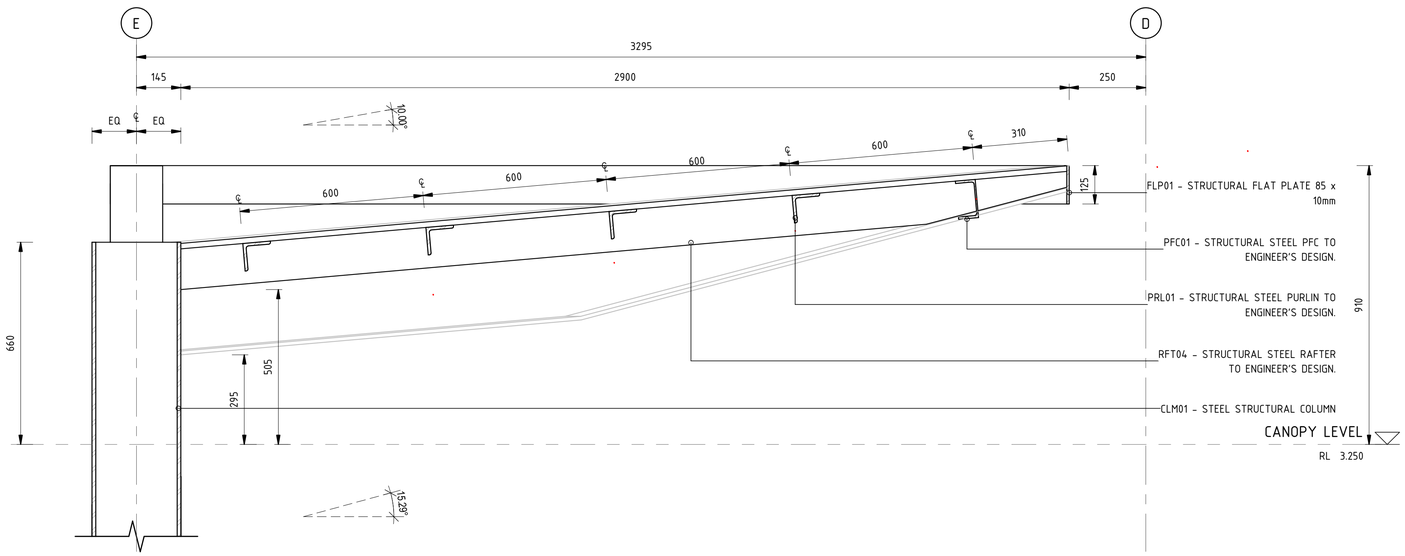

2 SIDE MODULE - STRUCTURAL DETAIL

Scale: 1 : 10

STRUCTURAL COMPONENT LEGEND

CLM01 - 290mm SQUARE COLUMN

PFC02 - 125mm PFC FIXED TO RAFTERS

FPL01 - ISLAND MODULE 125x8mm FLAT PLATE FIXED TO RAFTER

PRL01 - 90mm EQUAL ANGLE PURLIN FIXED TO RAFTERS

RFT01 - EXTENDED DIAGONAL SIDE MODULE TAPERED RAFTER FIXED TO COLUMN

RFT05 - SIDE MODULE 360UB x 171mm WIDE PLATE TAPERED RAFTER FIXED TO COLUMN

RFT04 - 150mm MID MODULE RAFTER FIXED TO COLUMN

** NOTE: REFER TO MATERIALS SCHEDULE FOR PROTECTIVE COATING TO STEEL MEMEBERS.

ALL STEEL TO STRUCTURAL ENGINEER'S DESIGN & SPECIFICATION

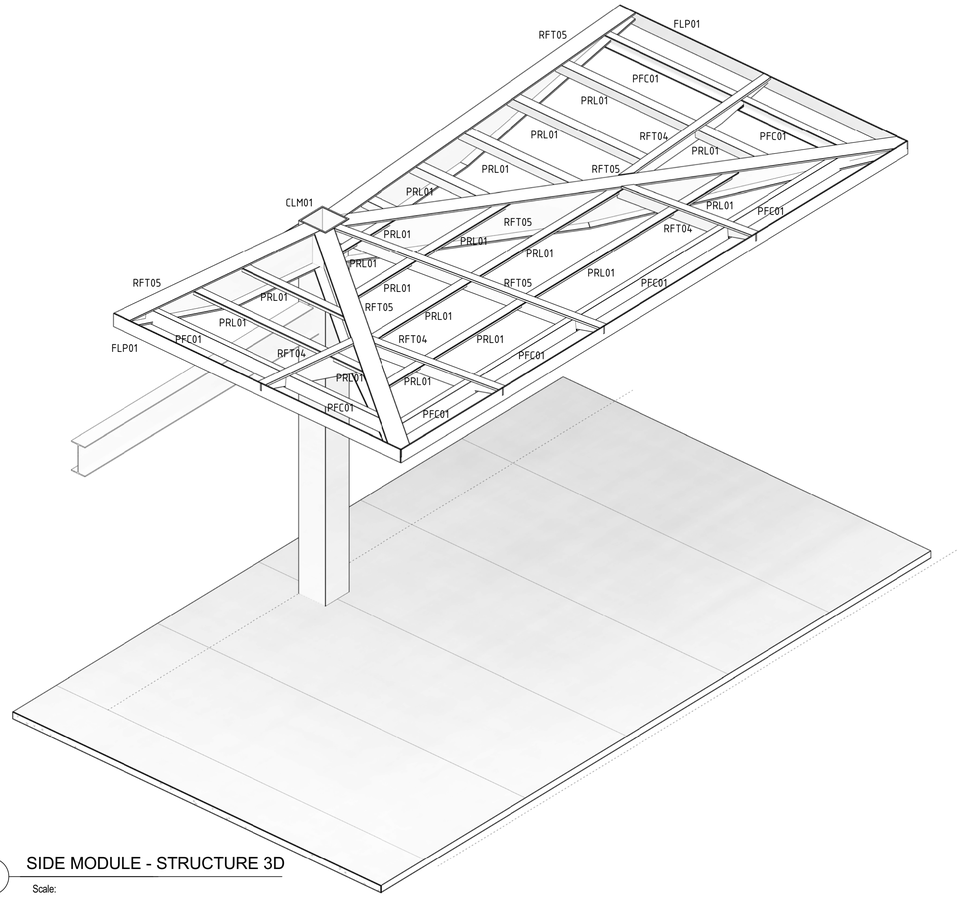

3 SIDE MODULE - STRUCTURE 3D

Scale:

DRAWING COLOUR CODED - PRINT ALL COPIES IN COLOUR

AMD	DESCRIPTION	DESIGNER SIGN / DATE	VERIFIED SIGN / DATE	APPROVED SIGN / DATE
B	STAGE 2R ISSUE	PJ 03/03	NJ 03/03	KC 03/03
A	STAGE 2 ISSUE	PJ 11/11	NJ 11/11	KC 11/11

CO-ORDINATE SYSTEM: *MGA Zone 56* HEIGHT DATUM: *A.H.D.* SCALE: *As indicated @ A1*

CapitalMetro ACT Government

CANBERRA METRO Move | Live | Grow

This drawing is confidential and shall only be used for the purpose of this project. The signing of this title block confirms the design and drafting of this project have been prepared and checked in accordance with the Architectus quality assurance system to ISO 9001-2008.

architectus™

DRAWN	PAUL JENKINS	03/03/2017
DESIGNED	PAUL JENKINS	03/03/2017
DRG CHECK	NIGEL JUSTINS	03/03/2017
DESIGN CHECK	TRENT RUSSELL	03/03/2017
APPROVED	KEVIN CURRUCAN	03/03/2017

CAPITAL METRO PROJECT

PACKAGE 55 - TYPICAL DETAILS

ARCHITECTURAL

TYPICAL SIDE MODULE - STRUCTURAL FRAME SECTIONS

FILE No. 160117 SHEET: OF A1

STATUS: STAGE 2R ©

DRG No. 03-ARC-DRW-ARC-SP-8721 B EDMS No.

DF 801*554

File Plotted C:\Users\PaulJenkins\Documents\160117_Typical Details_pauljenkins.rvt

Plot Date & Time 3/3/2017 1:25:42 PM